HAL-LOK

流 体 连 接 件 专 家

Fittings & Valves

上海浩流机械设备有限公司

Shanghai Haoliu Machinery Equipment Co., LTD

INTRODUCTION

Shanghai HaoLiu Machinery Equipment Co.,Ltd. Mainly produces and sells tube fittings,pipe fittings,quick connectors,stainless steel pressure regulator,diaphragm valves,stainless steel ball valves,stainless steel needle valves,instrument manifolds,seamless steel pipes,and provides gas pipeline engineering installation.The company has a group of high-quality engineering quality technical talents and mangement personnel,continuously introducing advanced technical experience,production equipment,and testing instrument from both domestic and foreign countries,and is committed to becoming a leading enterprise in the mechanical industry.

Our products sell well both domestically and internationally,and can be provided in the various forms such as single and double ferrules.They can be interchanged and used with international brands.Our products are widely used in petrochemical,natural gas,metallurgy,analytical instruments,biopharmaceutical,paper,food,shipbuilding,semiconductor and other fields.

We will make unremitting efforts,innovate continuously,improve product quality,improve after-sales service,and win strong support and praise from customers.

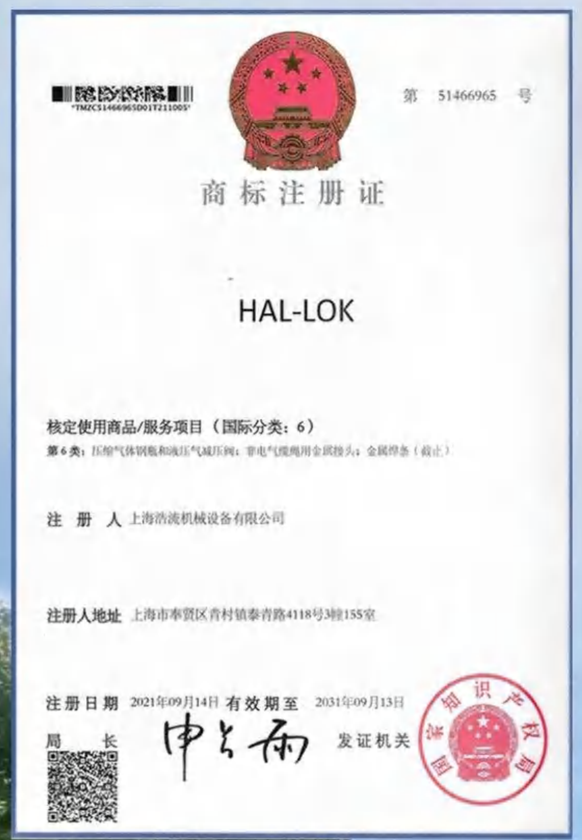
第 51466965 号

商标注册证

HAL-LOK

核定使用商品/服务项目（国际分类：6）

第6类：压缩气体钢瓶和液压气减压阀；非电气缆绳用金属接头；金属焊条（截止）

注 册 人 上海浩流机械设备有限公司

注册人地址 上海市奉贤区青村镇泰青路4118号3幢155室

注册日期 2021年09月14日 有效期至 2031年09月13日

局 长 发证机关


True Safety Testing

Certificate Of Compliance

Certificate No.	:	TST2022087028 1-3RC
Applicant	:	Shanghai Haoliu Mechanical Equipment Co., Ltd No. 29, Jintang Road, Pudong New Area, Shanghai
Manufacturer	:	Shanghai Haoliu Mechanical Equipment Co., Ltd No. 29, Jintang Road, Pudong New Area, Shanghai
Trade Mark	:	HAL-LOK
Sample Name	:	fittings and valves
Main Model	:	SKT-1/4
Series No.	:	4C-SS,6M-SS,YBQF-4,FMZF-4,HL8SL,YZ-KTG-6.35X0.89
Test Standard	:	IEC62321-1:2013 IEC62321-3-1:2013 IEC62321-4:2013/AMD1:2017 IEC62321-5:2013 IEC62321-6:2015 IEC62321-7-1:2015 IEC62321-7-2:2017 IEC62321-8:2017
As shown in the Test Report No.	:	TST2022087028 1-3RR

The EUT described above has been consolidated by us and found in compliance with the council RoHS 2.0 Directive (EU) 2015/863 and (EU)2017/2102 amending Annex II to Directive 2011/65/EU.
The certificate applies to the tested sample above mentioned only and shall not imply an assessment of the whole production. It is only valid in connection with the test report number. TST2022087028 1-3RR

Andy
Certification Manager
Date:Sept.01,2022

Dongguan True Safety Testing Co., Ltd.
Room 201, No.20, East of Houjie Avenue, Houjie, Dongguan, Guangdong, China
Tel: 86-0769-85088050 4001086960 E-mail:tst@tst-test.com http://www.tst-test.com


ISO 9001

CERTIFICATE OF REGISTRATION

Certificate NO.861802004201Q

This Certificate has been awarded to:

Shanghai haoliu mechanical equipment Co., Ltd

Address: Room 155, building 3, No.4118, Taiqing Road, Qingcun Town, Fengxian District, Shanghai

Established quality management system in line with

GB/T19001-2008/ISO9001:2015 standard

Scope of certification/registration:

(Mechanical equipment and accessories, metal products, hardware products, mechanical and electrical equipment processing (limited to branches), wholesale and retail, fluid control equipment, valves, instruments and meters, electrical equipment, metal materials, pipeline accessories wholesale and retail, professional construction of construction mechanical and electrical installation project, engaged in import and export of goods and technology import and export business.)

Date First Registered:May 15, 2020 Date Certificate Expires:May 14, 2023

Issued by:

ASIA DETECTION (CHINA) CERTIFICATION SERVICE CENTER
www.china-acc.com.cn

CONTENTS

CONTENTS

One-Piece Instrumentation Ball Valves

High Pressure Ball Valves

Instrumentation Needle Valves

Pressure Regulators

Gas Control Panel

Accessories , 54

Union Straight

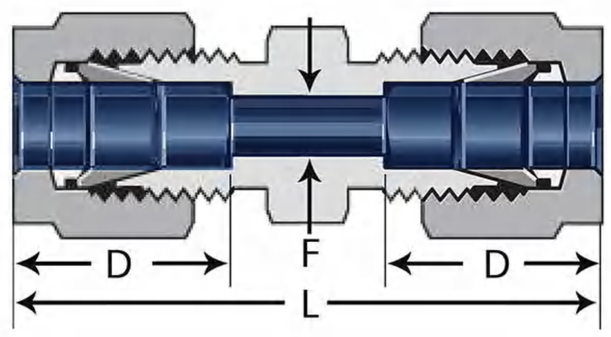

Dimensions,in.

Tube OD	Basic Ordering Number	Dimensions		
		L	D	F
1/8	SKT-2	1.40	0.50	0.09
3/16	SKT-3	1.47	0.54	0.12
1/4	SKT-4	1.61	0.60	0.19
5/16	SKT-5	1.69	0.64	0.25
3/8	SKT-6	1.77	0.66	0.28
1/2	SKT-8	2.02	0.90	0.41
5/8	SKT-10	2.05	0.96	0.50
3/4	SKT-12	2.11		0.62
7/8	SKT-14	2.17	1.02	0.72
1	SKT-16	2.55	1.23	0.88
1 1/8	SKT-18			0.97
1 1/4	SKT-20	3.63	1.62	1.09
1 1/2	SKT-24	4.25	1.97	1.34
2	SKT-32	5.88	2.66	1.81

Dimensions,mm.

Tube OD	Basic Ordering Number	Dimensions		
		L	D	F
2	SKT-2M	35.6	12.9	1.7
3	SKT-3M	35.3		2.4
4	SKT-4M	37.3	13.7	
6	SKT-6M	41.0	15.3	4.8
8	SKT-8M	43.2	16.2	6.4
10	SKT-10M	46.2	17.2	7.9
12	SKT-12M	51.2	22.8	9.5
14	SKT-14M	52.0	24.4	11.1
15	SKT-15M			11.9
16	SKT-16M			12.7
18	SKT-18M	53.5		15.1
20	SKT-20M	55.0	26.0	15.9
22	SKT-22M			18.3
25	SKT-25M	65.0	31.3	21.8
28	SKT-28M	85.0	36.6	
30	SKT-30M	92.7	39.6	26.2
32	SKT-32M	97.3	42.0	28.6
38	SKT-38M	114.0	49.4	33.7
50	SKT-50M	146.0	65.0	45.2

Reducing Union

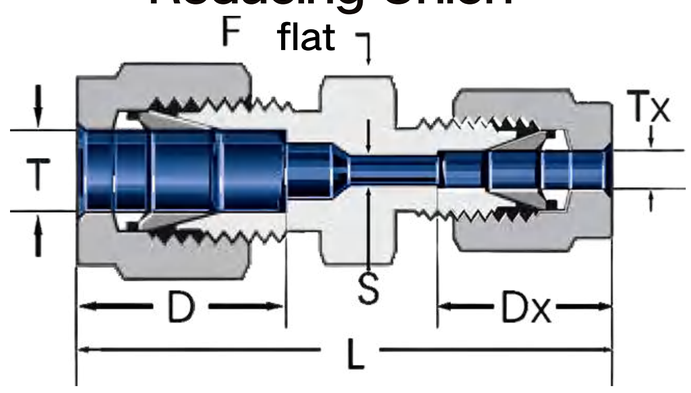

Tube OD		Basic Ordering Number	Dimensions				
T(mm)	Tx(in)		L	D	Dx	S	F
3	1/8	SKT-3M-2	35.2	12.9	12.8	2.4	12
4	1/8	SKT-4M-2	36.5	13.7	12.8	2.4	12
	1/4	SKT-4M-4	39.4		15.3		14
6	1/8	SKT-6M-2	38.5	15.3	12.8	2.4	14
	1/4	SKT-6M-4	41.0		15.3	4.8	14
	5/16	SKT-6M-5	42.3		16.2	4.8	14
	3/8	SKT-6M-6	43.2		16.8	4.8	16
8	1/4	SKT-8M-4	42.3	16.2	15.3	4.8	15
	3/8	SKT-8M-6	44.3		16.9	6.4	16
10	1/8	SKT-10M-2	41.8	17.2	12.8	2.4	18
	1/4	SKT-10M-4	44.5		15.3	4.8	
	5/16	SKT-10M-5	45.1		16.2	6.4	
	3/8	SKT-10M-6	45.9		16.9	7.1	
12	1/4	SKT-12M-4	47.0	22.8	15.3	4.8	22
	5/16	SKT-12M-5	47.8		16.2	6.4	
	3/8	SKT-12M-6	48.4		16.9	7.1	
	1/2	SKT-12M-8	51.2		22.8	9.5	
15	1/2	SKT-15M-8	52.0	24.4	22.8	10.3	24
16	5/8	SKT-16M-10	52.0	24.4	24.4	12.7	24
18	3/4	SKT-18M-12	53.5	24.4	24.4	15.1	27
20	1/2	SKT-20M-8	55.0	26.0	22.8	10.3	30
	1	SKT-20M-16	62.8		31.3	15.9	35
25	1	SKT-25M-16	65.0	31.3	31.3	21.8	35

How to Order

Select a basic ordering number. Example: SKT-2

Add a material designator. Example: SKT-2-SS

Material	Designator
316 SS	SS
Aluminum	A
Alloy 20	C
Alloy 400	M
Alloy 600	INC
Alloy 825	825

Material	Designator
Alloy C-276	HC
Brass	B
Carbon steel	S
Nylon	NY
PTFE	T
Titanium	Ti

NOTE: Dimensions subject to change, to be used for reference only.For detailed parameters, please consult HAL technical support.

Reducing Union

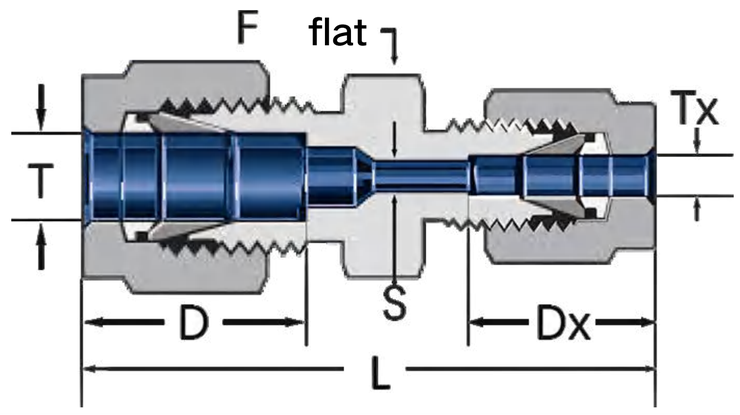

Tube OD		Basic Ordering Number	Dimensions,in			
T(in)	Tx(in)		L	D	Dx	S
1/4	1/8	SKT-4-2	1.52	0.60	0.50	0.09
	3/16	SKT-4-3	1.55		0.54	0.12
3/8	1/8	SKT-6-2	1.61	0.66	0.50	0.09
	1/4	SKT-6-4	1.70		0.60	0.19
	5/16	SKT-6-5	1.74		0.64	0.25
1/2	1/8	SKT-8-2	1.78	0.90	0.50	0.09
	1/4	SKT-8-4	1.85		0.60	0.19
	3/8	SKT-8-6	1.91		0.66	0.28
5/8	3/8	SKT-10-6	1.94	0.96	0.66	0.28
	1/2	SKT-10-8	2.05		0.90	0.41
3/4	1/4	SKT-12-4	1.94	0.96	0.60	0.19
	3/8	SKT-12-6	2.00		0.66	0.28
	1/2	SKT-12-8	2.11		0.90	0.41
	5/8	SKT-12-10	2.11		0.96	0.50
1	1/2	SKT-16-8	2.38	1.23	0.90	0.41
	3/4	SKT-16-12			0.96	0.62

Tube OD		Basic Ordering Number	Dimensions,mm			
T(mm)	Tx(mm)		L	D	Dx	S
6	3	SKT -6M-3M	38.6	15.3	12.9	2.4
	4	SKT -6M-4M	39.4		13.7	2.4
8	6	SKT -8M-6M	42.3	16.2	15.3	4.8
10	6	SKT-10M-6M	44.5	17.2	15.3	4.8
	8	SKT-10M-8M	45.1		16.2	6.4
12	6	SKT-12M-6M	47.0	22.8	15.3	4.8
	8	SKT-12M-8M	47.8		16.2	6.4
	10	SKT-12M-10M	48.7		17.2	7.9
16	10	SKT-16M-10M	45.9	24.4	17.2	7.9
	12	SKT-16M-12M	52.0		22.8	9.5
18	12	SKT-18M-12M	53.5	24.4	22.8	9.5
25	18	SKT-25M-18M	61.0	31.3	24.4	15.1
	20	SKT-25M-20M	62.3		26.0	15.9
30	18	SKT-30M-18M	75.4	39.6	24.4	15.1
	20	SKT-30M-20M	75.4		26.0	15.9
	25	SKT-30M-25M	80.1		31.3	21.8
32	18	SKT-32M-18M	77.8	42.0	24.4	15.1
	20	SKT-32M-20M	77.8		26.0	15.9
	25	SKT-32M-25M	82.3		31.3	21.8
38	20	SKT-38M-20M	87.5	49.4	26.0	15.9
	25	SKT-38M-25M	92.0		31.3	21.8
	30	SKT-38M-30M	105.0		39.6	26.2

NOTE: Dimensions subject to change, to be used for reference only.For detailed parameters, please consult HAL technical support.

Bulkhead Union

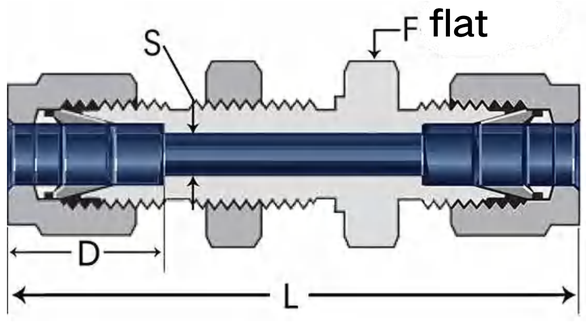

Tube OD	Basic Ordering Number	Dimensions,in.					
		L	D	S	F	Panel Hole Size	Max Panel Thickness
1/8	CBSKT-2	2.02	0.50	0.09	1/2	21/64	0.50
1/4	CBSKT-4	2.27	0.60	0.19	5/8	29/64	0.40
5/16	CBSKT-5	2.39	0.64	0.25	11/16	33/64	0.44
3/8	CBSKT-6	2.45	0.66	0.28	3/4	37/64	
1/2	CBSKT-8	2.80	0.90	0.41	1 5/16	49/64	0.50
5/8	CBSKT-10	2.86	0.96	0.50	1 1/16	57/64	
3/4	CBSKT-12	3.11	0.96	0.62	1 3/16	1 1/64	0.66
1	CBSKT-16	3.77	1.23	0.88	1 5/8	1 21/64	0.75
1 1/4	CBSKT-20	4.85	1.62	1.09	1 7/8	1 41/64	
1 1/2	CBSKT-24	5.48	1.97	1.34	2 1/4	1 61/64	
2	CBSKT-32	7.10	2.66	1.81	2 3/4	2 41/64	

Tube OD	Basic Ordering Number	Dimensions,mm					
		L	D	S	F	Panel Hole Size	Max Panel Thickness
3	CBSKT-3M	51.3	12.9	2.4	14	8.3	12.7
4	CBSKT-4M	53.6	13.7	2.4		9.9	
6	CBSKT-6M	57.7	15.3	4.8	16	11.5	10.2
8	CBSKT-8M	61.0	16.2	6.4	18	13.1	11.2
10	CBSKT-10M	63.7	17.2	7.9	22	16.3	
12	CBSKT-12M	71.0	22.8	9.5	24	19.5	12.7
14	CBSKT-14M	72.5	24.4	11.1	27	22.5	
15	CBSKT-15M	72.5	24.4	11.9		22.8	
16	CBSKT-16M	72.5	24.4	12.7			
18	CBSKT-18M	78.9	24.4	15.1	30	26.0	16.8
20	CBSKT-20M	84.5	26.0	15.9	35	29.0	19.0
25	CBSKT-25M	96.0	31.3	21.8	41	34.0	
30	CBSKT-30M	124.0	39.6	26.2	50	40.5	
32	CBSKT-32M	128.0	42.0	28.6		12.5	
38	CBSKT-38M	145.0	49.4	33.7	60	50.5	

Bulkhead Reducing Union

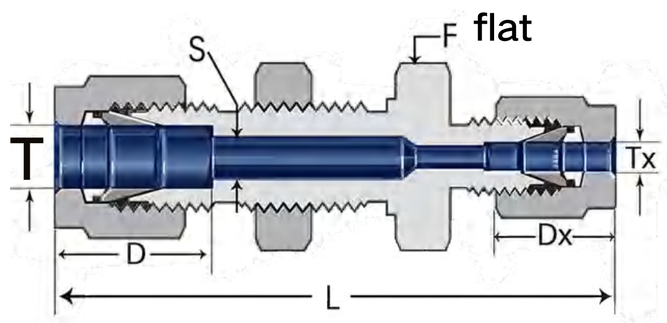

Tube OD		Basic Ordering Number	Dimensions,in.						
T	TX		L	D	DX	S	F	Panel Hole Size	Max Panel Thickness
1/4	1/8	CBSKT-4-2	2.17	0.60	0.50	0.09	5/8	29/64	0.40
3/8	1/4	CBSKT-6-4	2.38	0.66	0.60	0.19	3/4	37/64	0.44
1/2	1/4	CBSKT-8-4	2.63	0.90			15/16	49/64	0.50

Tube OD		Basic Ordering Number	Dimensions,mm						
T	TX		L	D	DX	S	F	Panel Hole Size	Max Panel Thickness
6	3	CBSKT-6M-3M	55.1	15.3	12.7	2.4	16	11.5	10.2
6	10	CBSKT-6M-10M	60.4	16.7	15.2	4.8	19	14	11.1
6	12	CBSKT-6M-12M	66.8	22.8	15.2	4.8	23.8	17	12.7

NOTE: Dimensions subject to change, to be used for reference only.For detailed parameters, please consult HAL technical support.

Male Connector

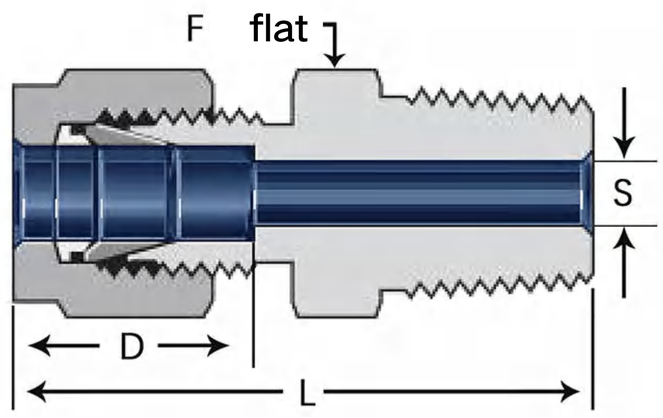

Tube OD	NPT in.	Basic Ordering Number	Dimensions,mm L	D	S	F
3	1/8	SKTM-3M-2N	30.5	12.9	2.4	12
	1/4	SKTM-3M-4N	35.6			14
4	1/8	SKTM-4M-2N	31.2	13.7	2.4	12
	1/4	SKTM-4M-4N	36.3			14
6	1/8	SKTM-6M-2N	32.8	15.3	4.8	14
	1/4	SKTM-6M-4N	37.9			14
	3/8	SKTM-6M-6N	38.4			18
	1/2	SKTM-6M-8N	44.7			22
8	1/8	SKTM-8M-2N	34.2	16.2	4.8	15
	1/4	SKTM-8M-4N	38.7		6.4	15
	3/8	SKTM-8M-6N	39.9		6.4	18
	1/2	SKTM-8M-8N	45.6		6.4	22
10	1/8	SKTM-10M-2N	36.3	17.2	4.8	18
	1/4	SKTM-10M-4N	40.9		7.1	18
	3/8	SKTM-10M-6N	40.9		7.9	18
	1/2	SKTM-10M-8N	46.5		7.9	22
	3/4	SKTM-10M-12N	48.0		7.9	27
12	1/8	SKTM-12M-2N	38.8	22.8	4.8	22
	1/4	SKTM-12M-4N	43.4		7.1	22
	3/8	SKTM-12M-6N	43.4		9.5	22
	1/2	SKTM-12M-8N	49.0		9.5	22
	3/4	SKTM-12M-12N	50.5		9.5	27
14	1/4	SKTM-14M-4N	44.1	24.4	7.1	24
	3/8	SKTM-14M-6N	44.1		9.5	
	1/2	SKTM-14M-8N	49.0		11.1	
15	1/2	SKTM-15M-8N	49.0	24.4	11.9	24
16	3/8	SKTM-16M-6N	44.1	24.4	9.5	24
	1/2	SKTM-16M-8N	49.0		11.9	24
	3/4	SKTM-16M-12N	50.5		12.7	27
18	1/2	SKTM-18M-8N	50.5	24.4	11.9	27
	3/4	SKTM-18M-12N			15.1	
20	1/2	SKTM-20M-8N	52.3	26.0	11.9	30
	3/4	SKTM-20M-12N			15.9	
22	3/4	SKTM-22M-12N	52.3	26.0	15.9	30
	1	SKTM-22M-16N	57.1		18.3	35
25	1/2	SKTM-25M-8N	57.5	31.3	11.9	35
	3/4	SKTM-25M-12N	57.5		15.9	
	1	SKTM-25M-16N	62.3		21.8	
28	1	SKTM-28M-16N	72.4	36.6	21.8	41
	1 1/4	SKTM-28M-20N	73.1			46
30	1 1/4	SKTM-30M-20N	77.2	39.6	26.2	46
32	1 1/4	SKTM-32M-20N	79.6	42.0	28.6	46
38	1 1/2	SKTM-38M-24N	91.6	49.4	33.7	55

Tube OD	NPT	Basic Ordering Number	Dimensions,in. L	D	S	F
1/8	1/8	SKTM-2-2N	1.20	0.50	0.09	7/16
	1/4	SKTM-2-4N	1.40			9/16
	3/8	SKTM-2-6N	1.41			11/16
	1/2	SKTM-2-8N	1.66			7/8
3/16	1/8	SKTM-3-2N	1.23	0.54	0.12	7/16
	1/4	SKTM-3-4N	1.43			9/16
1/4	1/8	SKTM-4-2N	1.29	0.60	0.19	1/2
	1/4	SKTM-4-4N	1.49		0.19	9/16
	3/8	SKTM-4-6N	1.51		0.19	11/16
	1/2	SKTM-4-8N	1.76		0.19	7/8
	3/4	SKTM-4-12N	1.82		0.19	1 1/16
5/16	1/8	SKTM-5-2N	1.34	0.64	0.19	9/16
	1/4	SKTM-5-4N	1.52		0.25	9/16
	3/8	SKTM-5-6N	1.54		0.25	11/16
3/8	1/8	SKTM-6-2N	1.39	0.66	0.19	5/8
	1/4	SKTM-6-4N	1.57		0.28	5/8
	3/8	SKTM-6-6N	1.57		0.28	11/16
	1/2	SKTM-6-8N	1.82		0.28	7/8
	3/4	SKTM-6-12N	1.88		0.28	1 1/16
	1	SKTM-6-16N	2.14		0.28	1 3/8
1/2	1/8	SKTM-8-2N	1.53	0.90	0.19	13/16
	1/4	SKTM-8-4N	1.71		0.28	13/16
	3/8	SKTM-8-6N	1.71		0.38	13/16
	1/2	SKTM-8-8N	1.93		0.41	7/8
	3/4	SKTM-8-12N	1.99		0.41	1 1/16
	1	SKTM-8-16N	2.25		0.41	1 3/8
5/8	1/4	SKTM-10-4N	1.74	0.96	0.28	15/16
	3/8	SKTM-10-6N	1.74		0.38	15/16
	1/2	SKTM-10-8N	1.93		0.47	15/16
	3/4	SKTM-10-12N	1.99		0.50	1 1/16
3/4	3/8	SKTM-12-6N	1.80	0.96	0.41	1 1/16
	1/2	SKTM-12-8N	1.99		0.47	1 1/16
	3/4	SKTM-12-12N	1.99		0.62	1 1/16
	1	SKTM-12-16N	2.25		0.62	1 3/8
7/8	1/2	SKTM-14-8N	1.99	1.02	0.47	1 3/16
	3/4	SKTM-14-12N	1.99		0.62	1 3/16
	1	SKTM-14-16N	2.25		0.72	1 3/8
1	1/2	SKTM16-8N	1.99	1.23	0.47	1 3/8
	3/4	SKTM16-12N	1.99		0.62	
	1	SKTM16-16N	2.25		0.88	
1 1/8	1	SKTM-18-16N	2.45	1.23	0.88	1 5/8
1 1/4	1	SKTM-20-16N	3.04	1.62	0.88	1 3/4
	1 1/4	SKTM-20-20N			1.09	
1 1/2	1 1/2	SKTM-24-24N	3.50	1.97	1.34	2 1/8
2	2	SKTM-32-32N	4.47	2.66	1.81	2 3/4

NOTE: Dimensions subject to change, to be used for reference only.For detailed parameters, please consult HAL technical support.

Male Connector

ISO/BSP Tapered Thread ,(R ZG)

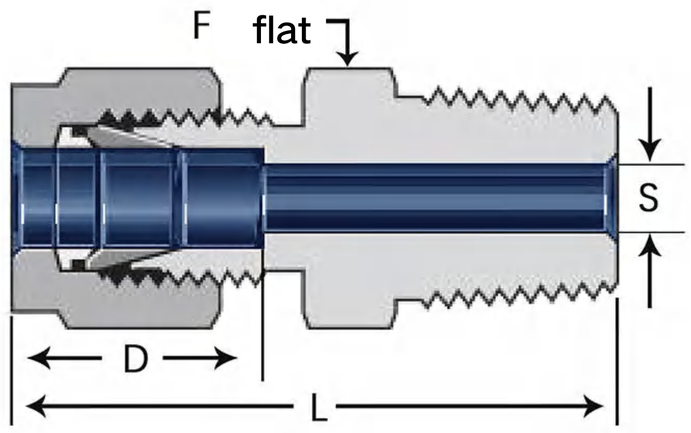

Tube OD	ISO/BSP	Basic Ordering Number	Dimensions,in			
			L	D	S	F
1/8	1/8	SKTM-2-2RT	1.25	0.55	0.14	7/16
	1/4	SKTM-2-4RT	1.45			9/16
1/4	1/8	SKTM-4-2RT	1.34	0.65	0.24	1/2
	1/4	SKTM-4-4RT	1.54			9/16
	3/8	SKTM-4-6RT	1.56			11/16
	1/2	SKTM-4-8RT	1.85			7/8
5/16	1/8	SKTM-5-2RT	1.39	0.69	0.24	9/16
	1/4	SKTM-5-4RT	1.57		0.30	
3/8	1/8	SKTM-6-2RT	1.44	0.71	0.24	5/8
	1/4	SKTM-6-4RT	1.62		0.33	5/8
	3/8	SKTM-6-6RT	1.62		0.33	11/16
	1/2	SKTM-6-8RT	1.87		0.33	7/8
	3/4	SKTM-6-12RT	1.93		0.33	1 1/16
1/2	1/4	SKTM-8-4RT	1.76	0.95	0.33	13/16
	3/4	SKTM-8-6RT	1.76		0.43	13/16
	1/2	SKTM-8-8RT	1.98		0.46	7/8
	3/4	SKTM-8-12RT	2.04		0.46	1 1/16
5/8	1/2	SKTM-10-8RT	1.98	1.01	0.52	15/16
3/4	3/4	SKTM-12-12RT	2.04	1.01	0.67	1 1/16
	1	SKTM-12-16RT	2.30			1 3/8
1	3/4	SKTM-16-12RT	2.31	1.28	0.68	1 3/8
	1	SKTM-16-16RT	2.50		0.93	

Tube OD	ISO/BSP	Basic Ordering Number	Dimensions,mm			
			L	D	S	F
2	1/8	SKTM-2M-2RT	31.0	13.4	2.2	12.5
3	1/8	SKTM-3M-2RT	31.0	13.4	2.9	12.5
	1/4	SKTM-3M-4RT	36.1			14.5
4	1/8	SKTM-4M-2RT	31.7	14.2	2.9	12.5
	1/4	SKTM-4M-4RT	36.8			14.5
6	1/8	SKTM-6M-2RT	33.3	15.8	5.3	14.5
	1/4	SKTM-6M-4RT	38.4			14.5
	3/8	SKTM-6M-6RT	38.9			18.5
	1/2	SKTM-6M-8RT	45.2			22.5
8	1/8	SKTM-8M-2RT	34.7	16.7	5.3	15.5
	1/4	SKTM-8M-4RT	39.2		6.9	15.5
	3/8	SKTM-8M-6RT	39.7		6.9	18.5
	1/2	SKTM-8M-8RT	46.1		6.9	22.5
10	1/8	SKTM-10M-2RT	36.8	17.7	5.3	18.5
	1/4	SKTM-10M-4RT	41.4		7.6	18.5
	3/8	SKTM-10M-6RT	41.4		8.4	18.5
	1/2	SKTM-10M-8RT	47.0		8.4	22.5
	3/4	SKTM-10M-12RT	48.5		8.4	27.5
12	1/4	SKTM-12M-4RT	44.0	23.3	7.6	22.5
	3/8	SKTM-12M-6RT	43.9		10.0	22.5
	1/2	SKTM-12M-8RT	49.5		10.0	22.5
	3/4	SKTM-12M-12RT	51.0		10.0	27.5
14	1/4	SKTM-14M-4RT	44.6	24.9	7.6	24.5
	3/8	SKTM-14M-6RT	44.6		10.0	
15	1/2	SKTM-15M-8RT	49.5	24.9	12.4	24.5
16	1/4	SKTM-16M-4RT	44.6	24.9	7.6	24.5
	3/8	SKTM-16M-6RT	44.6		10.0	24.5
	1/2	SKTM-16M-8RT	50.1		12.4	24.5
	3/4	SKTM-16M-12RT	51.0		13.2	27.5
18	1/2	SKTM-18M-8RT	51.0	24.9	12.4	27.5
	3/4	SKTM-18M-12RT			15.6	
20	1/2	SKTM-20M-8RT	52.8	26.5	12.4	30.5
	3/4	SKTM-20M-12RT			16.4	
22	3/4	SKTM-22M-12RT	52.8	26.5	16.4	30.5
	1	SKTM-22M-16RT	57.6		18.8	35.5
25	1/2	SKTM-25M-8RT	58.0	31.8	12.4	35.5
	3/4	SKTM-25M-12RT	58.0		16.4	
	1	SKTM-25M-16RT	62.8		22.3	
28	1	SKTM-28M-16RT	72.9	37.1	22.3	41.5
	1 1/4	SKTM-28M-20RT	73.6			46.5
30	1 1/4	SKTM-30M-20RT	77.7	77.7	26.7	46.5
32	1 1/4	SKTM-32M-20RT	80.1	80.1	29.1	46.5
38	1 1/2	SKTM-38M-24RT	92.1	92.1	34.2	55.5

NOTE: Dimensions subject to change, to be used for reference only.For detailed parameters, please consult HAL technical support.

Male Connector
ISO/BSP Parallel Thread ,(G)

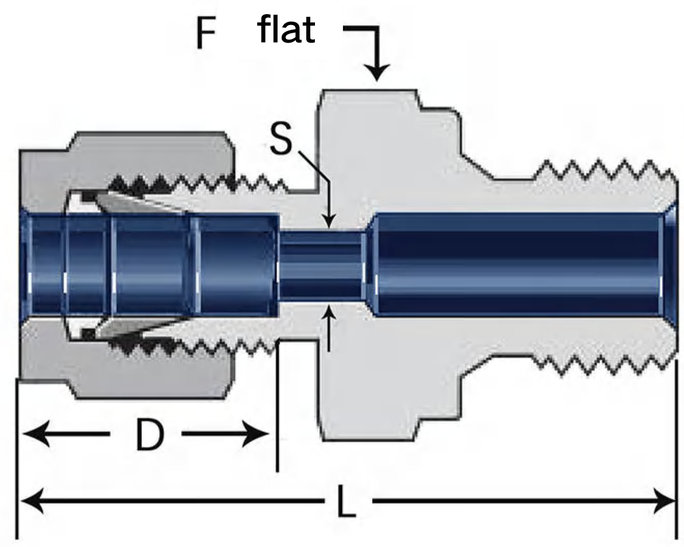

Tube OD	Thread size	Basic Ordering Number	Dimensions,in			
			L	D	S	F
1/8	1/8	SKTB-2-2G	1.36	0.55	0.14	9/16
	1/4	SKTB-2-4G	1.55			3/4
	3/8	SKTB-2-6G	1.58			7/8
1/4	1/8	SKTB-4-2G	1.45	0.65	0.21	9/16
	1/4	SKTB-4-4G	1.64		0.24	3/4
	3/8	SKTB-4-6G	1.67		0.24	7/8
	1/2	SKTB-4-8G	1.75		0.24	1 1/16
3/8	1/8	SKTB-6-2G	1.54	0.71	0.21	5/8
	1/4	SKTB-6-4G	1.70		0.28	3/4
	3/8	SKTB-6-6G	1.73		0.33	7/8
	1/2	SKTB-6-8G	1.81		0.33	1 1/16
1/2	1/4	SKTB-8-4G	1.81	0.95	0.28	13/16
	3/8	SKTB-8-6G	1.84		0.36	7/8
	1/2	SKTB-8-8G	1.92		0.46	1 1/16
3/4	1/2	SKTB-12-8G	1.97	1.01	0.52	1 1/16
	3/4	SKTB-12-12G	2.10		0.67	1 5/16
1	1/2	SKTB-16-8G	2.24	1.28	0.20	1 3/8
	3/4	SKTB-16-12G	2.32		0.68	1 3/8
	1	SKTB-16-16G	2.40		0.83	1 5/8

Tube OD	Thread size in	Basic Ordering Number	Dimensions,mm			
			L	D	S	F
2	1/8	SKTB-2M-2G	33.8	13.4	2.2	14.5
3	1/8	SKTB-3M-2G	33.8	13.4	2.9	14.5
	1/4	SKTB-3M-4G	38.6			19.5
4	1/8	SKTB-4M-2G	34.5	14.2	2.9	14.5
6	1/8	SKTB-6M-2G	36.1	15.8	4.5	14.5
	1/4	SKTB-6M-4G	40.9		5.3	19.5
	3/8	SKTB-6M-6G	41.6		5.3	22.5
	1/2	SKTB-6M-8G	43..7		5.3	27.5
8	1/8	SKTB-8M-2G	37.2	16.7	4.5	15.5
	1/4	SKTB-8M-4G	41.9		6.9	19.5
	3/8	SKTB-8M-6G	42.7		6.9	22.5
	1/2	SKTB-8M-8G	44.7		6.9	27.5
10	1/4	SKTB-10M-4G	42.7	17.7	6.4	19.5
	3/8	SKTB-10M-6G	43.4		8.4	22.5
	1/2	SKTB-10M-8G	45.5		8.4	27.5
12	1/4	SKTB-12M-4G	45.0	23.3	6.4	22.5
	3/8	SKTB-12M-6G	46.0		8.4	22.5
	1/2	SKTB-12M-8G	48.0		10.0	27.5
	3/4	SKTB-12M-12G	52.6		10.0	35.5
14	3/8	SKTB-14M-6G	44.4	24.9	8.4	24.5
	1/2	SKTB-14M-8G	48.0		11.6	27.5
15	3/8	SKTB-15M-6G	46.0	24.9	8.4	24.5
	1/2	SKTB-15M-8G	48.0		12.4	27.5
	3/4	SKTB-15M-12G	53.3		12.4	35.5
16	3/8	SKTB-16M-6G	46.0	24.9	8.4	24.5
	1/2	SKTB-16M-8G	48.0		12.4	27.5
	3/4	SKTB-16M-12G	53.3		13.2	35.5
18	1/2	SKTB-18M-8G	49.3	24.9	12.4	27.5
	3/4	SKTB-18M-12G	52.6		15.6	35.5
20	1/2	SKTB-20M-8G	51.0	26.5	12.4	30.5
	3/4	SKTB-20M-12G	53.1		16.4	35.5
22	3/4	SKTB-22M-12G	53.1	26.5	16.4	35.5
	1	SKTB-22M-16G	55.4		18.8	41.5
25	3/4	SKTB-22M-12G	58.2	31.8	16.4	35.5
	1	SKTB-22M-16G	60.2		20.3	41.5
28	1	SKTB-28M-16G	70.4	37.1	20.3	41.5
	1 1/4	SKTB-28M-20G	73.4		22.3	50.5
30	1 1/4	SKTB-30M-20G	77.2	40.1	25.5	50.5
32	1 1/4	SKTB-32M-20G	79.7	42.6	25.5	50.5

NOTE: Dimensions subject to change, to be used for reference only.For detailed parameters, please consult HAL technical support.

NOTE: If ordering R threads, add RT to the ordering number.
Example:CBSK-2-2RT
Example:CBSK-6M-2RT

Bulkhead NPT

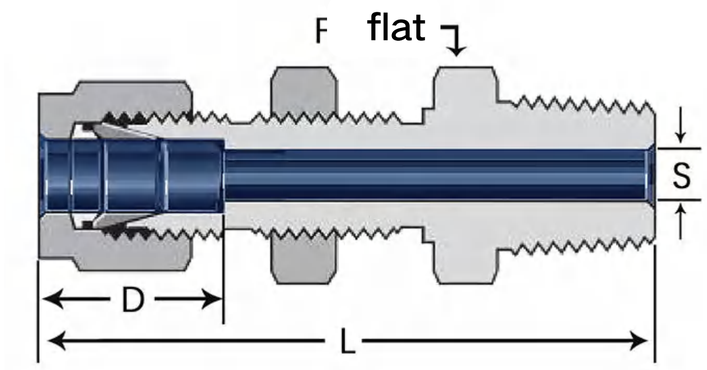

Tube OD	NPT	Basic Ordering Number	Dimensions,in					
			L	D	S	F	Panel Hole Size	Max Panel Thickness
1/8	1/8	CBSK-2-2N	1.88	0.55	0.14	1/2	21/64	0.55
1/4	1/8	CBSK-4-2N	2.00	0.65	0.24	5/8	29/64	0.45
	1/4	CBSK-4-4N	2.18					
3/8	1/4	CBSK-6-4N	2.31	0.71	0.33	3/4	37/64	0.49
	3/8	CBSK-6-6N	2.31			3/4		
	1/2	CBSK-6-8N	2.56			7/8		
1/2	3/8	CBSK-8-6N	2.54	0.95	0.43	15/16	49/64	0.55
	1/2	CBSK-8-8N	2.76		0.46		1 1/64	
3/4	3/4	CBSK-12-12N	3.05	1.01	0.67	1 3/16		0.71
1	1	CBSK-16-16N	3.72	1.28	0.93	1 5/8	1 21/64	0.80

Tube OD	NPT in.	Basic Ordering Number	Dimensions,mm					
			L	D	S	F	Panel Hole Size	Max Panel Thickness
6	1/8	CBSK-6M-2N	50.00	15.8	5.3	16.0	11.5	10.0
	1/4	CBSK-6M-4N	54.10					
12	1/2	CBSK-12M-8N	69.30	23.3	10.0	24.0	19.5	13.2

AN Fitting

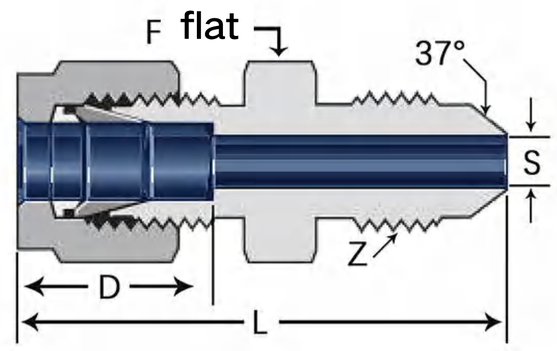

Tube OD	AN Tube Flare Size	Basic Ordering Number	Dimensions,in.				
			L	D	S	F	Z
1/16	1/8	SKTF-1-2J	1.12	0.39	0.10	7/16	5/16-24UNJF-3
1/8	1/8	SKTF-2-2J	1.32	0.55	0.11	7/16	5/16-24UNJF-3
	1/4	SKTF-2-4J	1.43		0.14	1/2	7/16-20UNJF-3
1/4	1/4	SKTF-4-4J	1.53	0.65	0.22	1/2	7/16-20UNJF-3
5/16	5/16	SKTF-5-5J	1.56	0.69	0.28	9/16	1/2-20UNJF-3
3/8	1/4	SKTF-6-4J	1.61	0.71	0.22	5/8	7/16-20UNJF-3
	3/8	SKTF-6-6J			0.33		9/16-18UNJF-3
1/2	1/2	SKTF-8-8J	1.86	0.95	0.44	13/16	3/4-16UNJF-3
3/4	3/4	SKTF-12-12J	2.15	1.01	0.66	1 1/8	1 1/16-12UNJ-3
1	1	SKTF-16-16J	2.47	1.28	0.89	1 3/8	1 5/16-12UNJ-4

NOTE: Dimensions subject to change, to be used for reference only.For detailed parameters, please consult HAL technical support.

Weld Connector

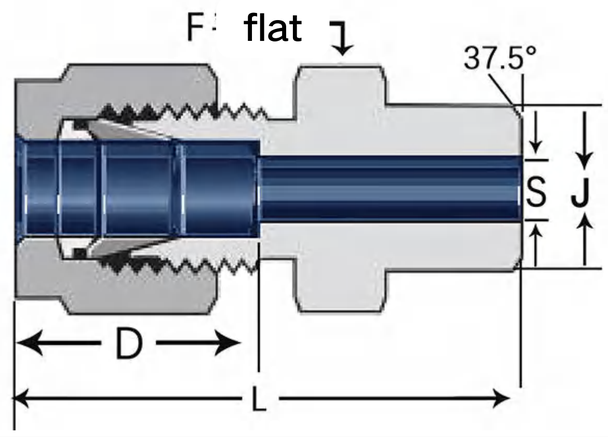

Tube OD	Pipe Weld Size	Basic Ordering Number	Dimensions,in.				
			L	D	S	F	J
1/8	1/8	SKCW-2-2P	1.20	0.50	0.09	7/16	0.405
3/16	1/8	SKCW-3-2P	1.23	0.54	0.12	7/16	0.405
1/4	1/8	SKCW-4-2P	1.29	0.60	0.19	1/2	0.405
	1/4	SKCW-4-4P	1.49			9/16	0.540
5/16	1/8	SKCW-5-2P	1.34	0.64	0.21	9/16	0.450
	1/4	SKCW-5-4P	1.52		0.25		0.540
3/8	1/4	SKCW-6-4P	1.57	0.66	0.28	5/8	0.540
	3/8	SKCW-6-6P	1.57			11/16	0.675
	1/8	SKCW-6-2P	1.82			7/8	0.840
	3/4	SKCW-6-12P	1.88			1 1/6	1.050
1/2	3/8	SKCW-8-6P	1.71	0.90	0.41	13/16	0.675
	1/2	SKCW-8-8P	1.93			7/8	0.840
	3/4	SKCW-8-12P	1.99			1 1/6	1.050
	1	SKCW-8-16P	2.25			1 3/8	1.315
5/8	1/2	SKCW-10-8P	1.93	0.96	0.50	15/16	0.840
3/4	1/2	SKCW-12-8P	1.99	0.96	0.55	1 1/16	0.840
	3/4	SKCW-12-12P			0.62		1.050
1	1	SKCW-16-16P	2.45	1.23	0.88	1 3/8	1.315
1 1/4	1 1/4	SKCW-20-20P	3.04	1.62	1.09	1 3/4	1.660
1 1/2	1 1/2	SKCW-24-24P	3.50	1.97	1.34	2 1/8	1.900
2	2	SKCW-32-32P	4.47	2.66	1.81	2 3/4	2.375

Tube OD	Pipe Weld Size (in.)	Basic Ordering Number	Dimensions,mm					
			L	D	S	F	F in	J
3	1/8	SKCW-3M-2P	30.5	12.9	2.4	12	1/2	10.3
4	1/8	SKCW-4M-2P	31.2	13.7	2.4	12	1/2	10.3
6	1/8	SKCW-6M-2P	32.8	15.3	4.8	14	1/2	10.3
	1/4	SKCW-6M-4P	37.9				9/16	13.7
8	1/8	SKCW-8M-2P	34.2	16.2	5.4	15	9/16	10.3
	1/4	SKCW-8M-4P	38.7		6.4	15	9/16	13.7
	1/2	SKCW-8M-8P	45.6		6.4	22	7/8	21.3
10	1/4	SKCW-10M-4P	40.9	17.2	7.5	18	11/16	13.7
	3/8	SKCW-10M-6P	40.9		7.9	18	11/16	17.1
	1/2	SKCW-10M-8P	46.5		0.9	22	7/8	21.3
12	1/4	SKCW-12M-4P	43.4	22.8	7.5	22	13/16	13.7
	3/8	SKCW-12M-6P	43.4		9.5	22	13/16	17.1
	1/2	SKCW-12M-8P	49.0		9.5	22	7/8	21.3
	3/4	SKCW-12M-12P	50.5		9.5	27	1 1/6	26.7
14	3/8	SKCW-14M-6P	44.1	24.4	10.7	24	15/16	17.1
15	1/2	SKCW-15M-8P	49.0	24.4	11.9	24	15/16	21.3
16	1/2	SKCW-16M-8P	49.0	24.4	12.7	24	15/16	21.3
18	1/2	SKCW-18M-8P	50.5	24.4	13.9	27	1 1/16	21.3
30	1 1/4	SKCW-30M-20P	77.2	39.6	26.2	46	46mm	42.2
32	1 1/4	SKCW-32M-20P	9.6	42.0	28.6	46	46mm	42.2
38	1 1/2	SKCW-38M-24P	91.6	49.4	33.7	55	55mm	48.3

NOTE: Dimensions subject to change, to be used for reference only.For detailed parameters, please consult HAL technical support.

Female Connector

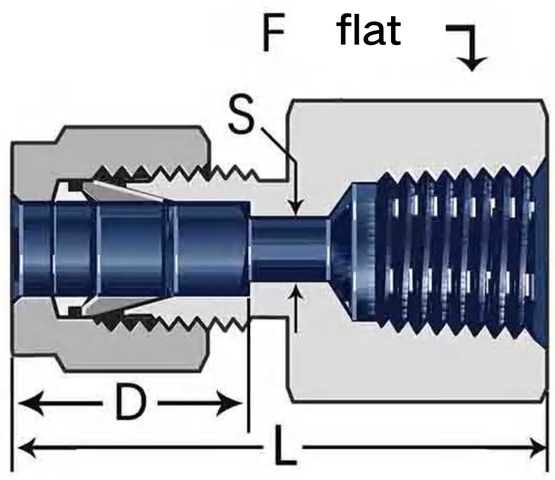

Tube OD	NPT	Basic Ordering Number	Dimensions,in			
			L	D	S	F
1/8	1/8	SKNF-2-2N	1.13	0.50	0.09	9/16
	1/4	SKNF-2-4N	1.32			3/4
3/16	1/8	SKNF-3-2N	1.17	0.54	0.12	9/16
1/4	1/8	SKNF-4-2N	1.23	0.60	0.19	9/16
	1/4	SKNF-4-4N	1.41			3/4
	3/8	SKNF-4-6N	1.48			7/8
	1/2	SKNF-4-8N	1.67			1 1/16
5/16	1/8	SKNF-5-2N	1.26	0.64	0.25	9/16
	1/4	SKNF-5-4N	1.45			3/4
3/8	1/8	SKNF-6-2N	1.29	0.66	0.28	5/8
	1/4	SKNF-6-4N	0.48			3/4
	3/8	SKNF-6-6N	1.54			7/8
	1/2	SKNF-6-8N	1.73			1 1/16
	3/4	SKNF-6-12N	1.88			1 5/16
1/2	1/4	SKNF-8-4N	1.59	0.90	0.41	13/16
	3/8	SKNF-8-6N	1.65			7/8
	1/2	SKNF-8-8N	1.84			1 1/16
	3/4	SKNF-8-12N	1.90			1 5/16
5/8	3/8	SKNF-10-6N	1.65	0.96	0.50	15/16
	1/2	SKNF-10-8N	1.84			1 1/16
	3/4	SKNF-10-12N	1.90			1 5/16
3/4	1/2	SKNF-12-8N	1.84	0.96	0.62	1 1/16
	3/4	SKNF-12-12N	1.90			1 5/16
7/8	3/4	SKNF-14-12N	1.96	1.02	0.72	1 5/16
1	3/4	SKNF-16-12N	2.10	1.23	0.88	1 3/8
	1	SKNF-16-16N	2.45			1 5/8
1 1/4	1 1/4	SKNF-20-20N	2.94	1.62	1.09	2 1/8
1 1/2	1 1/2	SKNF-24-24N	3.28	1.97	1.34	2 3/8
2	2	SKNF-32-32N	4.00	2.66	1.81	2 7/8

Tube OD	NPT	Basic Ordering Number	Dimensions,mm			
			L	D	S	F
3	1/8	SKNF-3M-2N	28.7	12.9	2.4	14
	1/4	SKNF-3M-4N	33.5			19
4	1/8	SKNF-4M-2N	29.7	13.7	2.4	14
6	1/8	SKNF-6M-2N	31.3	15.3	4.8	14
	1/4	SKNF-6M-4N	35.8			19
	3/8	SKNF-6M-6N	37.6			22
	1/2	SKNF-6M-8N	42.5			27
8	1/8	SKNF-8M-2N	32.1	16.2	6.4	15
	1/4	SKNF-8M-4N	37.0			19
	3/8	SKNF-8M-6N	38.5			22
	1/2	SKNF-8M-8N	43.3			27
10	1/4	SKNF-10M-4N	37.8	17.2	7.9	19
	3/8	SKNF-10M-6N	39.4			22
	1/2	SKNF-10M-8N	44.2			27
12	1/4	SKNF-12M-4N	40.3	22.8	9.5	22
	3/8	SKNF-12M-6N	41.9			22
	1/2	SKNF-12M-8N	46.7			27
15	1/2	SKNF-15M-8N	46.7	24.4	11.9	27
16	1/2	SKNF-16M-8N	46.9	24.4	12.7	27
20	1/2	SKNF-20M-8N	47.9	26.0	15.9	30
	3/4	SKNF-20M-12N	49.7			35
22	3/4	SKNF-22M-12N	49.7	26.0	18.2	35
	1	SKNF-22M-16N	57.9			41
25	3/4	SKNF-25M-12N	53.4	31.3	21.8	35
	1	SKNF-25M-16N	62.3			41

NOTE: Dimensions subject to change, to be used for reference only.For detailed parameters, please consult HAL technical support.

Female Connector
ISO/BSP Tapered Thread ,(R ZG)

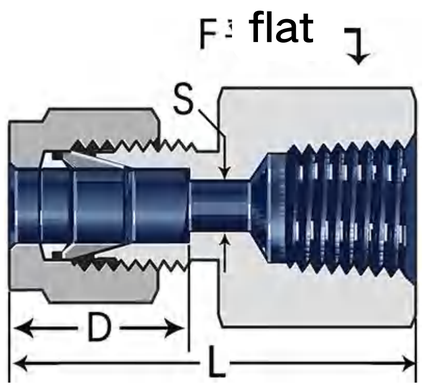

Tube OD	ISO/BSP	Basic Ordering Number	Dimensions,in			
			L	D	S	F
1/8	1/8	SKNF-2-2RT	1.18	0.55	0.14	9/16
1/4	1/8	SKNF-4-2RT	1.28	0.65	0.24	9/16
	1/4	SKNF-4-4RT	1.46			3/4
	3/8	SKNF-4-6RT	1.53			7/8
	1/2	SKNF-4-8RT	1.72			1 1/16
3/8	1/4	SKNF-6-4RT	1.53	0.71	0.33	3/4
	3/8	SKNF-6-6RT	1.59			7/8
	1/2	SKNF-6-8RT	1.78			1 1/16
1/2	1/4	SKNF-8-4RT	1.64	0.95	0.46	13/16
	3/8	SKNF-8-6RT	1.70			7/8
	1/2	SKNF-8-8RT	1.89			1 1/16

Tube OD	ISO/BSP in.	Basic Ordering Number	Dimensions,mm			
			L	D	S	F
3	1/8	SKNF-3M-2RT	29.2	13.4	2.9	14
6	1/8	SKNF-6M-2RT	31.8	15.8	5.3	14
	1/4	SKNF-6M-4RT	36.3			19
	3/8	SKNF-6M-6RT	38.1			22
	1/2	SKNF-6M-8RT	43.0			27
8	1/8	SKNF-8M-2RT	32.6	16.7	6.9	15
	1/4	SKNF-8M-4RT	37.5			19
	3/8	SKNF-8M-6RT	39.0			22
	1/2	SKNF-8M-8RT	43.8			27
10	1/8	SKNF-10M-2RT	33.5	17.7	8.4	18
	1/4	SKNF-10M-4RT	38.3			19
	3/8	SKNF-10M-6RT	39.9			22
	1/2	SKNF-10M-8RT	44.7			27
12	1/8	SKNF-12M-2RT	36.0	23.3	8.8	22
	1/4	SKNF-12M-4RT	40.8		10	22
	3/8	SKNF-12M-6RT	42.4		10	22
	1/2	SKNF-12M-8RT	47.2		10	27
	3/4	SKNF-12M-12RT	49.5		10	35
15	3/8	SKNF-15M-6RT	42.4	24.9	12.4	24
	1/2	SKNF-15M-8RT	47.2			27
20	1/2	SKNF-20M-8RT	48.4	26.5	16.4	30
	3/4	SKNF-20M-12RT	50.2			35
22	3/4	SKNF-22M-12RT	50.2	26.5	18.8	35
	1	SKNF-22M-16RT	58.4			41
25	3/4	SKNF-25M-12RT	53.9	31.8	22.3	35
	1	SKNF-25M-16RT	62.8			41

Female Connector
ISO/BSP Parallel Thread ,(G)

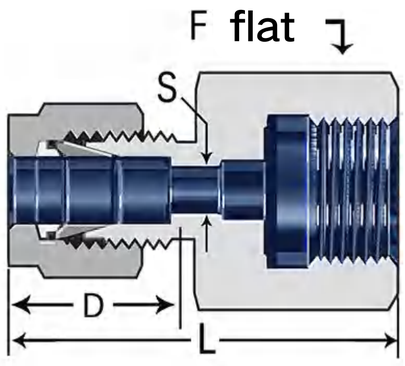

Tube OD	Thread size	Basic Ordering Number	Dimensions,in			
			L	D	S	F
1/4	1/4	SKNF-4-4G	1.53	0.65	0.23	3/4
	3/8	SKNF-4-6G	1.53		0.24	15/16
	1/2	SKNF-4-8G	1.76		0.24	1 1/16
5/16	1/4	SKNF-5-4G	1.56	0.69	0.27	3/4
	1/2	SKNF-5-8G	1.66		0.33	1 1/16
3/8	1/4	SKNF-6-4G	1.59	0.72	0.27	3/4
	3/8	SKNF-6-6G	1.57		0.31	15/16
	1/2	SKNF-6-8G	1.70		0.33	1 1/16
1/2	1/4	SKNF-8-4G	1.70	0.95	0.27	13/16
	3/8	SKNF-8-6G	1.80		0.31	15/16
	1/2	SKNF-8-8G	1.95		0.33	1 1/16

Tube OD	Thread size in.	Basic Ordering Number	Dimensions,mm			
			L	D	S	F
6	1/4	SKNF-6M-4G	38.1	15.8	5.3	19
	3/8	SKNF-6M-6G	38.1			24
	1/2	SKNF-6M-8G	44.0			27
8	1/4	SKNF-8M-4G	39.0	16.7	6.0	19
	3/8	SKNF-8M-6G	36.7		7.0	24
	1/2	SKNF-8M-8G	41.5		7.5	27
10	1/7	SKNF-10M-4G	39.9	17.7	6.0	19
	3/8	SKNF-10M-6G	39.3		7.0	24
	1/2	SKNF-10M-8G	42.6		7.5	27
12	1/4	SKNF-12M-4G	42.4	23.3	6.0	22
	3/8	SKNF-12M-6G	44.9		7.0	24
	1/2	SKNF-12M-8G	48.7		7.5	27

NOTE: Dimensions subject to change, to be used for reference only.For detailed parameters, please consult HAL technical support.

Reducers

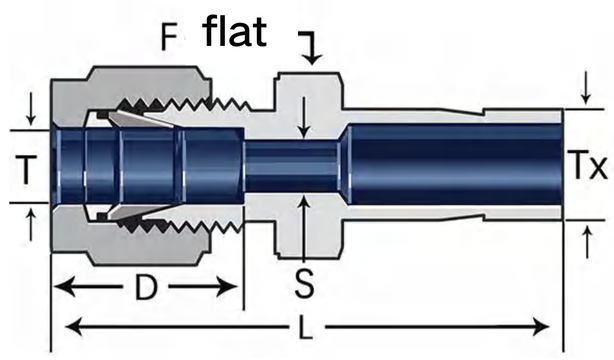

Tube OD		Basic Ordering Number	Dimensions,mm			
T (mm)	Tx (in)		L	D	S	F
3	1/8	SKG-3M-2	33.5	12.9	2.0	12
	1/4	SKG-3M-4	36.1		2.4	
4	1/4	SKG-4M-4	37.1	13.7	2.4	12
6	1/8	SKG-6M-2	36.9	15.3	2.0	14
	1/4	SKG-6M-4	39.2		4.4	
	5/16	SKG-6M-5	40.0		4.8	
	3/8	SKG-6M-6	40.7		4.8	
	1/2	SKG-6M-8	46.3		4.8	
8	1/4	SKG-8M-4	40.3	16.2	4.4	15
	3/8	SKG-8M-6	42.0		6.4	
	1/2	SKG-8M-8	47.6		6.4	
10	3/8	SKG-10M-6	44.2	17.2	6.8	18
	1/2	SKG-10M-8	49.8		7.9	
12	1/2	SKG-12M-8	52.3	22.8	9.3	22
	3/4	SKG-12M-12	53.8		9.5	
18	3/4	SKG-18M-12	56.1	24.4	14.7	27
	1	SKG-18M-16	62.4		15.1	
25	1	SKG-25M-16	69.5	31.3	20.2	35

Tube OD		Basic Ordering Number	Dimensions,mm			
T in.	Tx in.		L	D	S	F
1/8		SKG-2	33.5	12.9	2.0	12
1/4		SKG-4	39.2	15.3	4.4	14
3/8		SKG-6	42.0	16.2	6.4	15
1/2		SKG-8	52.3	22.8	9.3	18
3/4		SKG-12	56.1	24.4	14.7	27
1		SKG-16	69.5	31.3	20.2	35

Tube OD		Basic Ordering Number	Dimensions,in.			
T (in)	Tx(mm)		L	D	S	F
1/8	6	SKG-2-6M	1.42	0.50	0.09	7/16

Bulkhead Reducers

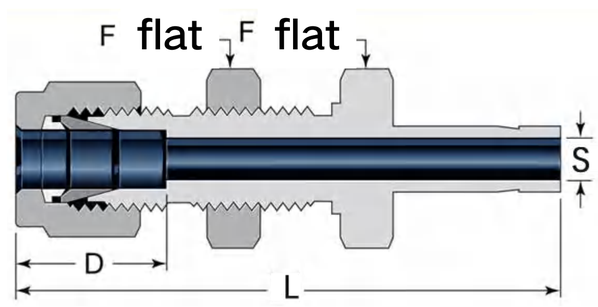

Tube OD (in)	Basic Ordering Number	Dimensions,in.					
		L	D	S	F	Panel Hole Size	Max Panel Thickness
1/8	CBSKLG-2	1.95	0.50	0.08	1/2	21/64	0.50
1/4	CBSKLG-4	2.20	0.60	0.17	5/8	29/64	0.40
3/8	CBSKLG-6	2.41	0.66	0.27	3/7	37/64	0.44
1/2	CBSKLG-8	2.87	0.90	0.37	15/16	49/64	0.50
5/8	CBSKLG-10	2.96	0.96	0.47	1 1/16	57/64	0.50
3/4	CBSKLG-12	3.21	0.96	0.58	1 3/16	1 1/64	0.66
1	CBSKLG-16	3.95	1.23	0.80	1 5/8	1 21/64	0.75

NOTE: Dimensions subject to change, to be used for reference only.For detailed parameters, please consult HAL technical support.

Port Connector

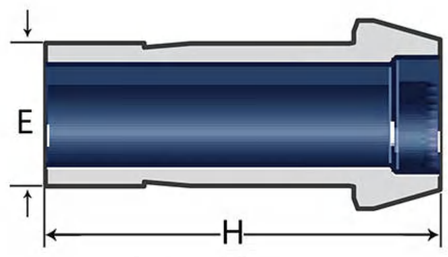

1 in./25 mm and under

Tube OD	Basic Ordering Number	Dimensions,in.	
		E	H
1/16	KAG-1	0.08	0.59
1/8	KAG-2	0.13	0.93
1/4	KAG-4	0.22	1.03
5/16	KAG-5	0.27	1.07
3/8	KAG-6	0.32	1.10
1/2	KAG-8	0.42	1.48
5/8	KAG-10	0.52	1.54
3/4	KAG-12	0.63	1.54
1	KAG-16	0.85	1.99
1 1/4	KAG-20	1.07	2.77
1 1/2	KAG-24	1.30	3.36
2	KAG-32	1.77	4.61

Port Connector

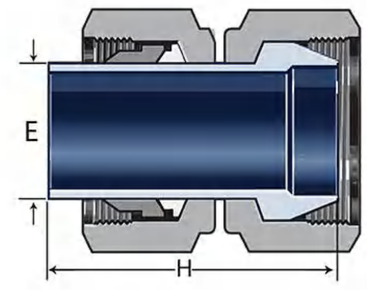

over 1 in./25 mm

Tube OD	Basic Ordering Number	Dimensions,mm	
		E	H
3	KAG-3M	2.4	22.70
6	KAG-6M	4.6	25.50
8	KAG-8M	6.1	26.50
10	KAG-10M	7.6	27.60
12	KAG-12M	9.3	36.70
15	KAG-15M	11.7	38.30
16	KAG-16M	12.5	38.30
18	KAG-18M	14.4	38.30
20	KAG-20M	16.0	39.90
25	KAG-25M	20.4	49.80
28	KAG-28M	23.0	64.00
30	KAG-30M	24.8	68.10
32	KAG-32M	27.0	70.20
38	KAG-38M	32.1	82.40

Cap

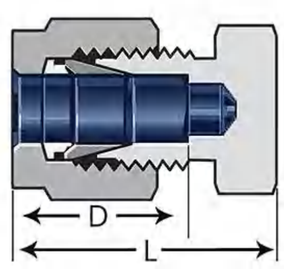

Dimensions,in.

Tube OD	Basic Ordering Number	L	D
1/8	GM-2	0.84	0.55
3/16	GM-3	0.89	0.59
1/4	GM-4	0.97	0.65
5/16	GM-5	1.01	0.69
3/8	GM-6	1.06	0.71
1/2	GM-8	1.20	0.95
5/8	GM-10	1.23	1.01
3/4	GM-12	1.29	1.01
7/8	GM-14	1.39	1.07
1	GM-16	1.56	1.28
1 1/8	GM-18	1.55	1.28
1 1/4	GM-20	2.15	1.67
1 1/2	GM-24	2.59	2.02
2	GM-32	3.46	2.71

Dimensions,mm

Tube OD	Basic Ordering Number	L	D
2	GM-2M	20.6	13.4
3	GM-3M	20.6	13.4
4	GM-4M	21.8	14.2
6	GM-6M	23.6	15.8
8	GM-8M	25.0	16.7
10	GM-10M	27.1	17.7
12	GM-12M	29.6	23.3
14	GM-14M	30.4	24.9
15	GM-15M	30.4	24.9
16	GM-16M	30.4	24.9
18	GM-18M	31.9	24.9
20	GM-20M	34.5	26.5
22	GM-22M	34.5	26.5
25	GM-25M	39.0	31.8
28	GM-28M	49.0	37.1
30	GM-30M	53.9	40.1
32	GM-32M	56.3	42.5
38	GM-38M	65.9	49.9

Plug

Dimensions,in.

Tube OD	Basic Ordering Number
1/8	DS-2
3/16	DS-3
1/4	DS-4
5/16	DS-5
3/8	DS-6
1/2	DS-8
5/8	DS-10
3/4	DS-12
7/8	DS-14
1	DS-16
1 1/4	DS-20
1 1/2	DS-24
2	DS-32

Dimensions,mm

Tube OD	Basic Ordering Number
2	DS-2M
3	DS-3M
4	DS-4M
6	DS-6M
8	DS-8M
10	DS-10M
12	DS-12M
15	DS-15M
16	DS-16M
18	DS-18M
20	DS-20M
22	DS-22M
25	DS-25M
28	DS-28M
30	DS-30M
32	DS-32M
38	DS-38M

NOTE: Dimensions subject to change, to be used for reference only.For detailed parameters, please consult HAL technical support.

45 ° Elbows Male

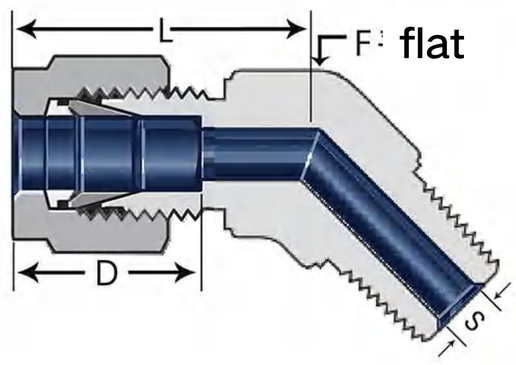

Tube OD	NPT	Basic Ordering Number	Dimensions,in.			
			L	D	S	F
1/4	1/8	SKT4-4-2	1.02	0.65	0.24	1/2
	1/4	SKT4-4-4				
3/8	1/8	SKT4-6-2	1.15	0.71	0.24	5/8
	1/4	SKT4-6-4	1.15		0.33	5/8
	3/8	SKT4-6-6	1.20		0.33	13/16
1/2	3/8	SKT4-8-6	1.31	0.95	0.43	13/16
	1/2	SKT4-8-8			0.46	
3/4	3/4	SKT4-12-12	1.38	1.01	0.67	1 1/16
1	1	SKT4-16-16	1.64	1.28	0.93	1 3/8

90 ° Union Elbows

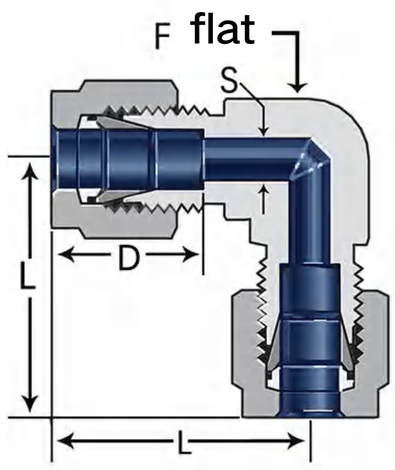

Tube OD	Basic Ordering Number	Dimensions,in.			
		L	D	S	F
1/8	SKTE-2	0.93	0.55	0.14	3/8
3/16	SKTE-3	1.05	0.59	0.17	1/2
1/4	SKTE-4	1.11	0.65	0.24	1/2
5/16	SKTE-5	1.18	0.69	0.30	9/16
3/8	SKTE-6	1.25	0.71	0.33	5/8
1/2	SKTE-8	1.47	0.95	0.46	13/16
5/8	SKTE-10	1.55	1.01	0.55	15/16
3/4	SKTE-12	1.62	1.01	0.67	1 1/16
7/8	SKTE-14	1.81	1.07	0.77	1 3/8
1	SKTE-16	1.98	1.28	0.93	1 3/8
1 1/8	SKTE-18	2.22	1.28	1.02	1 11/16
1 1/4	SKTE-20	2.72	1.67	1.14	1 11/16
1 1/2	SKTE-24	3.15	2.02	1.39	2
2	SKTE-32	4.27	2.71	1.86	2 3/4

Tube OD	Basic Ordering Number	Dimensions,mm			
		L	D	S	F
3	SKTE-3M	22.8	13.4	2.9	3/8
4	SKTE-4M	25.9	14.2	2.9	1/2
6	SKTE-6M	27.5	15.8	5.3	1/2
8	SKTE-8M	29.3	16.7	6.9	9/16
10	SKTE-10M	32.0	17.7	8.4	11/16
12	SKTE-12M	36.5	23.3	10.0	13/16
14	SKTE-14M	38.5	24.9	11.6	15/16
15	SKTE-15M	38.5	24.9	12.4	15/16
16	SKTE-16M	38.5	24.9	13.2	15/16
18	SKTE-18M	40.3	24.9	15.6	1 1/16
20	SKTE-20M	45.1	26.5	16.4	1 3/8
22	SKTE-22M	45.1	26.5	18.8	1 3/8
25	SKTE-25M	49.6	31.8	22.3	1 3/8
28	SKTE-28M	64.5	37.1	22.3	41mm
30	SKTE-30M	70.4	40.1	26.7	46mm
32	SKTE-32M	72.8	24.5	29.1	46mm
38	SKTE-38M	84.5	49.9	34.2	55mm
60	SKTE-60M	106.5	65.5	45.7	2 3/4

NOTE: Dimensions subject to change, to be used for reference only.For detailed parameters, please consult HAL technical support.

Weld Elbow

Tube Socket Weld

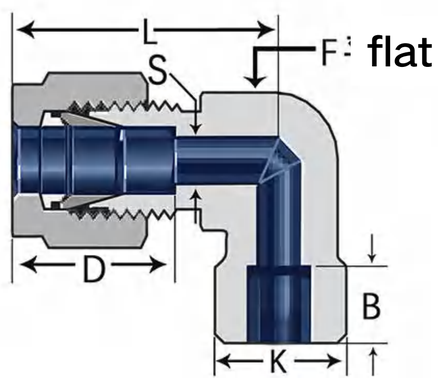

Tube OD	Socket Weld Size	Basic Ordering Number	Dimensions,in.					
			L	B	D	S	F	K
1/4	1/4	SKY-4W	1.11	0.33	0.65	0.24	1/2	0.55
3/8	3/8	SKY-6W	1.25	0.36	0.71	0.33	5/8	0.68
1/2	1/2	SKY-8W	1.47	0.43	0.95	0.46	13/16	0.86
3/4	3/4	SKY-12W	1.62	0.49	1.01	0.67	1 1/16	1.11
1	1	SKY-16W	1.98	0.67	1.28	0.93	1 3/8	1.43

Male Pipe Weld

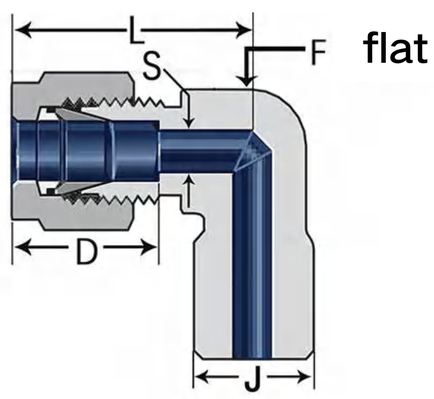

Tube OD	Pipe Weld Size	Basic Ordering Number	Dimensions,in.				
			L	D	S	F	J
1/4	1/8	SKG-4-2T	1.11	0.65	0.24	1/2	0.410
	1/4	SKG-4-4T					0.545
3/8	1/4	SKG-6-4T	1.25	0.71	0.33	5/8	0.545
1/2	1/2	SKG-8-8T	1.47	0.95	0.46	13/16	0.845
3/4	3/4	SKG-12-12T	1.62	1.01	0.67	1 1/16	1.055

NOTE: If ordering R threads, add RT to the ordering number.
Example:SKTF-2-2RT
Example:SKTF-6M-2RT

Female Elbow

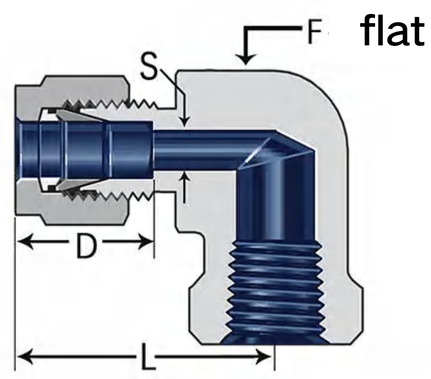

Tube OD	NPT	Basic Ordering Number	Dimensions,mm			
			L	D	S	F
6	1/8	SKTF-6M-2N	27.5	15.8	5.3	1/2
	1/4	SKTF-6M-4N	30.3			11/16
	1/2	SKTF-6M-8N	35.1			1
8	1/4	SKTF-8M-4N	31.1	16.7	6.9	11/16
10	1/2	SKTF-10M-8N	32.0	17.7	8.4	11/16
	1/4	SKTF-10M-4N	34.0			13/16
12	1/4	SKTF-12M-4N	36.5	23.3	10.0	13/16
	1/2	SKTF-12M-8N	39.3			1
16	1/2	SKTF-16M-8N	40.0	24.9	13.2	11/16

Tube OD	NPT	Basic Ordering Number	Dimensions,in.			
			L	D	S	F
1/8	1/8	SKTF- 2-2N	1.02	0.55	0.14	1/2
	1/4	SKTF- 2-4N	1.13			11/16
3/16	1/8	SKTF- 3-2N	1.05	0.59	0.17	1/2
1/4	1/8	SKTF- 4-2N	1.11	0.65	0.24	1/2
	1/4	SKTF- 4-4N	1.22			11/16
	3/8	SKTF- 4-6N	1.30			13/16
	1/2	SKTF- 4-8N	1.41			1
5/16	1/8	SKTF- 5-2N	1.18	0.69	0.30	9/16
	1/4	SKTF- 5-4N	1.24			11/16
3/8	1/8	SKTF- 6-2N	1.25	0.71	0.33	5/8
	1/4	SKTF- 6-4N	1.28			11/16
	3/8	SKTF- 6-6N	1.35			13/16
	1/2	SKTF- 6-8N	1.47			1
1/2	1/4	SKTF- 8-4N	1.47	0.95	0.46	13/16
	3/8	SKTF- 8-6N	1.47			13/16
	1/2	SKTF- 8-8N	1.58			1
5/8	3/8	SKTF-10-6N	1.55	1.01	0.55	15/16
	1/2	SKTF-10-8N	1.62			1 1/16
3/4	1/2	SKTF-12-8N	1.62	1.01	0.67	1 1/16
	3/4	SKTF-12-12N	1.81			1 3/8
7/8	3/4	SKTF-14-12N	1.81	1.07	0.77	1 3/8
1	3/4	SKTF-16-12N	1.98	1.28	0.93	1 3/8
	1	SKTF-16-16N	2.16			1 11/16

NOTE: Dimensions subject to change, to be used for reference only.For detailed parameters, please consult HAL technical support.

Male Elbow

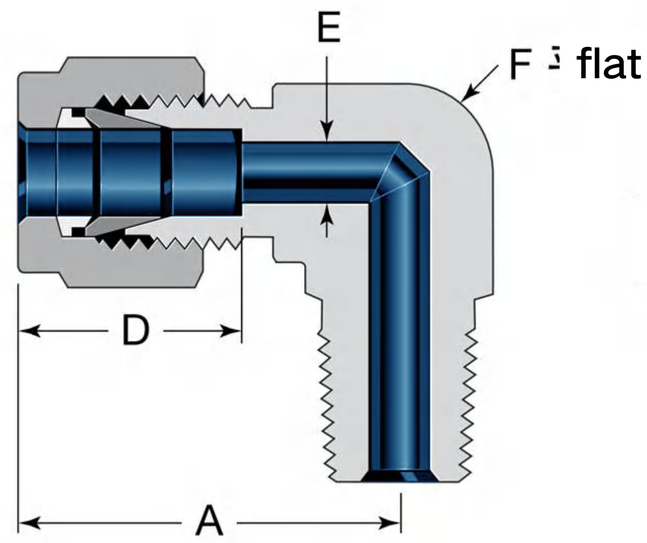

NOTE: If ordering R threads, add RT to the ordering number.
Example:SKTN-1-1RT
Example:SKTN-3M-2RT

Tube OD	NPT	Basic Ordering Number	Dimensions,in.			
			A	D	E	F
1/16	1/16	SKTN-1-1N	0.80	0.39	0.10	7/16
	1/8	SKTN-1-2N				
1/8	1/16	SKTN-2-1N	0.98	0.55	0.14	7/16
	1/8	SKTN-2-2N	0.98			7/16
	1/4	SKTN-2-4N	1.02			1/2
3/16	1/8	SKTN-3-2N	1.05	0.59	0.17	1/2
	1/4	SKTN-3-4N				
1/4	1/16	SKTN-4-1N	1.11	0.65	0.17	1/2
	1/8	SKTN-4-2N	1.11		0.24	1/2
	1/4	SKTN-4-4N	1.11		0.24	1/2
	3/8	SKTN-4-6N	1.22		0.24	11/16
	1/2	SKTN-4-8N	1.30		0.24	13/16
5/16	1/8	SKTN-5-2N	1.18	0.69	0.24	9/16
	1/4	SKTN-5-4N	1.18		0.30	9/16
	3/8	SKTN-5-6N	1.23		0.30	11/16
3/8	1/8	SKTN-6-2N	1.23	0.71	0.24	5/8
	1/4	SKTN-6-4N	1.23		0.33	5/8
	3/8	SKTN-6-6N	1.28		0.33	11/16
	1/2	SKTN-6-8N	1.36		0.33	13/16
	3/4	SKTN-6-12N	1.51		0.33	1 1/16
1/2	1/4	SKTN-8-4N	1.47	0.95	0.33	13/16
	3/8	SKTN-8-6N	1.47		0.43	13/16
	1/2	SKTN-8-8N	1.47		0.46	13/16
	3/4	SKTN-8-12N	1.62		0.46	1 1/16
5/8	3/8	SKTN-10-6N	1.55	1.01	0.43	15/16
	1/2	SKTN-10-8N	1.55		0.52	15/16
	3/4	SKTN-10-12N	1.62		0.55	1 1/16
3/4	1/2	SKTN-12-8N	1.62	0.01	0.52	1 1/16
	3/4	SKTN-12-12N			0.67	
7/8	3/4	SKTN-14-12N	1.81	0.07	0.67	1 3/8
1	3/4	SKTN-16-12N	1.98	1.28	0.67	1 3/8
	1	SKTN-16-16N			0.93	
1 1/4	1 1/4	SKTN-20-20N	2.72	1.67	1.14	1 11/16
1 1/2	1 1/2	SKTN-24-24N	3.15	2.02	1.39	2
2	2	SKTN-32-32N	4.27	2.71	0.86	2 3/4

Tube OD	NPT in	Basic Ordering Number	Dimensions,mm			
			A	D	E	F , in
3	1/8	SKTN-3M-2N	24.1	13.4	2.9	7/16
	1/4	SKTN-3M-4N	25.1			1/2
4	1/8	SKTN-4M-2N	25.9	14.2	2.9	1/2
	1/4	SKTN-4M-4N				
6	1/8	SKTN-6M-2N	27.5	15.8	5.3	1/2
	1/4	SKTN-6M-4N	27.5			1/2
	3/8	SKTN-6M-6N	30.3			11/16
	1/2	SKTN-6M-8N	32.3			13/16
8	1/8	SKTN-8M-2N	29.3	16.7	5.3	9/16
	1/4	SKTN-8M-4N	29.3		6.9	9/16
	3/8	SKTN-8M-6N	31.1		6.9	11/16
	1/2	SKTN-8M-8N	33.1		6.9	13/16
10	1/8	SKTN-10M-2N	32.0	17.7	5.3	11/16
	1/4	SKTN-10M-4N	32.0		7.6	11/16
	3/8	SKTN-10M-6N	32.0		8.4	11/16
	1/2	SKTN-10M-8N	34.0		8.4	13/16
12	1/4	SKTN-12M-4N	36.5	23.3	7.6	13/16
	3/8	SKTN-12M-6N	36.5		10.0	13/16
	1/2	SKTN-12M-8N	36.5		10.0	13/16
	3/4	SKTN-12M-10N	40.3		10.0	1 1/16
15	1/2	SKTN-15M-8N	38.5	24.9	12.4	15/16
16	3/8	SKTN-16M-6N	38.5	24.9	10.0	15/16
	1/2	SKTN-16M-8N	38.5		12.4	15/16
	3/4	SKTN-16M-12N	40.3		13.2	1 1/16
18	1/2	SKTN-18M-8N	40.3	24.9	12.4	1 1/16
	3/4	SKTN-18M-12N			15.6	
20	1/2	SKTN-20M-8N	45.1	26.5	12.4	1 3/8
	3/4	SKTN-20M-12N			15.6	
22	3/4	SKTN-22M-12N	45.1	26.5	15.6	1 3/8
	1	SKTN-22M-16N			18.8	
25	3/4	SKTN-25M-12N	49.6	31.8	16.4	1 3/8
	1	SKTN-25M-16N			22.3	
30	1 1/4	SKTN-30M-20N	70.4	40.1	26.7	1 11/16
32	1 1/4	SKTN-32M-20N	72.8	42.5	28.3	2
38	1 1/2	SKTN-38M-24N	84.5	49.9	34.2	2 3/4

NOTE: Dimensions subject to change, to be used for reference only.For detailed parameters, please consult HAL technical support.

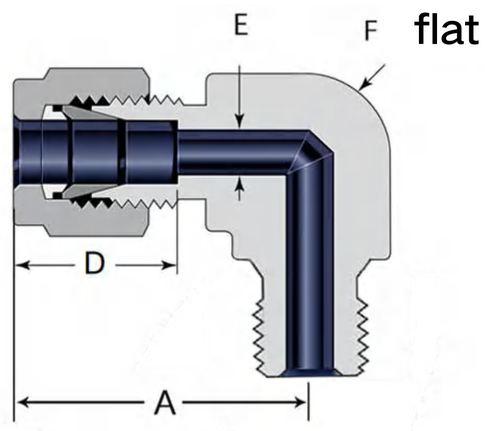

Male Elbow

ISO/BSP Tapered Thread

Tube OD	ISO Thread Size	Basic Ordering Number	Dimensions,in.			
			A	D	E	F
1/16	1/16	SKTG-1-1G	0.80	0.39	0.10	7/16
	1/8	SKTG-1-2G				
1/8	1/16	SKTG-2-1G	0.98	0.55	0.14	7/16
	1/8	SKTG-2-2G	0.98			7/16
	1/4	SKTG-2-4G	1.02			1/2
3/16	1/8	SKTG-3-2G	1.05	0.59	0.17	1/2
	1/4	SKTG-3-3G				
1/4	1/16	SKTG-4-1G	1.11	0.65	0.17	1/2
	1/8	SKTG-4-2G	1.11		0.24	1/2
	1/4	SKTG-4-4G	1.11		0.24	1/2
	3/8	SKTG-4-6G	1.22		0.24	11/16
	1/2	SKTG-4-8G	1.30		0.24	13/16
5/16	1/8	SKTG-5-2G	1.18	0.69	0.24	9/16
	1/4	SKTG-5-4G	1.18		0.30	9/16
	3/8	SKTG-5-6G	1.23		0.30	11/16
3/8	1/8	SKTG-6-2G	1.23	0.71	0.24	5/8
	1/4	SKTG-6-4G	1.23		0.33	5/8
	3/8	SKTG-6-6G	1.28		0.33	11/16
	1/2	SKTG-6-8G	1.36		0.33	13/16
	3/4	SKTG-6-12G	1.51		0.33	1 1/16
1/2	1/4	SKTG-8-4G	1.47	0.95	0.33	13/16
	3/8	SKTG-8-6G	1.47		0.43	13/16
	1/2	SKTG-8-8G	1.47		0.46	13/16
	3/4	SKTG-8-12G	1.62		0.46	1 1/16
5/8	3/8	SKTG-10-6G	1.55	1.01	0.43	15/16
	1/2	SKTG-10-8G	1.55		0.52	15/16
	3/4	SKTG-10-12G	1.62		0.55	1 1/16
3/4	1/2	SKTG-12-8G	1.62	0.01	0.52	1 1/16
	3/4	SKTG-12-12G			0.67	
7/8	3/4	SKTG-14-12G	1.81	0.07	0.67	1 3/8
1	3/4	SKTG-16-12G	1.98	1.28	0.67	1 3/8
	1	SKTG-16-16G			0.93	
1 1/4	1 1/4	SKTG-20-20G	2.72	1.67	1.14	1 11/16
1 1/2	1 1/2	SKTG-24-24G	3.15	2.02	1.39	2
2	2	SKTG-32-32G	4.27	2.71	0.86	2 3/4

Tube OD	ISO Thread Size in	Basic Ordering Number	Dimensions,mm			
			A	D	E	F , in
3	1/8	SKTG-3M-2G	24.1	13.4	2.9	7/16
	1/4	SKTG-3M-4G	25.1			1/2
4	1/8	SKTG-4M-2G	25.9	14.2	2.9	1/2
	1/4	SKTG-4M-4G				
6	1/8	SKTG-6M-2G	27.5	15.8	5.3	1/2
	1/4	SKTG-6M-4G	27.5			1/2
	3/8	SKTG-6M-6G	30.3			11/16
	1/2	SKTG-6M-8G	32.3			13/16
8	1/8	SKTG-8M-2G	29.3	16.7	5.3	9/16
	1/4	SKTG-8M-4G	29.3		6.9	9/16
	3/8	SKTG-8M-6G	31.1		6.9	11/16
	1/2	SKTG-8M-8G	33.1		6.9	13/16
10	1/8	SKTG-10M-2G	32.0	17.7	5.3	11/16
	1/4	SKTG-10M-4G	32.0		7.6	11/16
	3/8	SKTG-10M-6G	32.0		8.4	11/16
	1/2	SKTG-10M-8G	34.0		8.4	13/16
12	1/4	SKTG-12M-4G	36.5	23.3	7.6	13/16
	3/8	SKTG-12M-6G	36.5		10.0	13/16
	1/2	SKTG-12M-8G	36.5		10.0	13/16
	3/4	SKTG-12M-12G	40.3		10.0	1 1/16
15	1/2	SKTG-15M-8G	38.5	24.9	12.4	15/16
16	3/8	SKTG-16M-6G	38.5	24.9	10.0	15/16
	1/2	SKTG-16M-8G	38.5		12.4	15/16
	3/4	SKTG-16M-12G	40.3		13.2	1 1/16
18	1/2	SKTG-18M-8G	40.3	24.9	12.4	1 1/16
	3/4	SKTG-18M-12G			15.6	
20	1/2	SKTG-20M-8G	45.1	26.5	12.4	1 3/8
	3/4	SKTG-20M-12G			15.6	
22	3/4	SKTG-22M-12G	45.1	26.5	15.6	1 3/8
	1	SKTG-22M-16G			18.8	
25	3/4	SKTG-25M-12G	49.6	31.8	16.4	1 3/8
	1	SKTG-25M-16G			22.3	
30	1 1/4	SKTG-30M-20G	70.4	40.1	26.7	1 11/16
32	1 1/4	SKTG-32M-20G	72.8	42.5	28.3	2
38	1 1/2	SKTG-38M-24G	84.5	49.9	34.2	2 3/4

NOTE: Dimensions subject to change, to be used for reference only.For detailed parameters, please consult HAL technical support.

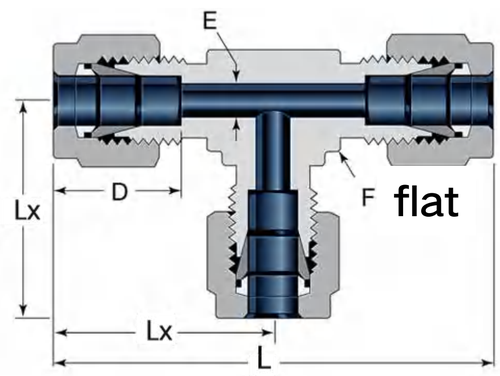

Union Tee

Tube OD	Basic Ordering Number	Dimensions,in.				
		L	Lx	D	E	F
1/8	SKTT-2	1.76	0.88	0.50	0.09	3/8
3/16	SKTT-3	1.92	0.96	0.54	0.12	7/16
1/4	SKTT-4	2.12	1.06	0.60	0.19	1/2
5/16	SKTT-5	2.34	1.17	0.64	0.25	5/8
3/8	SKTT-6	2.40	1.20	0.66	0.28	5/8
1/2	SKTT-8	2.84	1.42	0.90	0.41	13/16
5/8	SKTT-10	3.06	1.53	0.96	0.50	1
3/4	SKTT-12	3.14	1.57	0.96	0.62	1 1/16
7/8	SKTT-14	3.52	1.76	1.02	0.72	1 3/8
1	SKTT-16	3.86	1.93	1.23	0.88	1 3/8
1 1/8	SKTT-18	4.34	2.17	1.23	0.97	1 11/16
1 1/4	SKTT-20	5.34	2.67	1.62	1.09	1 11/16
1 1/2	SKTT-24	6.20	3.10	1.97	1.34	2
2	SKTT-32	8.44	4.22	2.66	1.81	2 3/4

Tube OD	Basic Ordering Number	Dimensions,mm				
		L	Lx	D	E	F
2	SKTT-2M	44.7	22.3	12.9	1.7	3/8
3	SKTT-3M	44.7	22.3	12.9	2.4	3/8
4	SKTT-4M	50.8	25.4	13.7	2.4	1/2
6	SKTT-6M	53.9	27.0	15.3	4.8	1/2
8	SKTT-8M	59.7	29.9	16.2	6.4	5/8
10	SKTT-10M	63.0	31.5	17.2	7.9	11/16
12	SKTT-12M	72.0	36.0	22.8	9.5	13/16
14	SKTT-14M	77.6	38.8	24.4	11.1	1
15	SKTT-15M	77.6	38.8	24.4	11.9	1
16	SKTT-16M	77.6	38.8	24.4	12.7	1
18	SKTT-18M	79.6	39.8	24.4	15.1	1 1/16
20	SKTT-20M	89.3	44.6	26.0	15.9	1 3/8
22	SKTT-22M	89.3	44.6	26.0	18.3	1 3/8
25	SKTT-25M	98.3	49.1	31.1	21.8	1 3/8
28	SKTT-28M	128.0	64.0	36.6	21.8	41mm
30	SKTT-30M	140.0	69.9	39.6	26.2	46mm
32	SKTT-32M	145.0	72.3	42.0	28.6	46mm
38	SKTT-38M	168.0	84.0	49.4	33.7	55mm
50	SKTT-50M	211.0	106.0	65.0	45.2	2 3/4

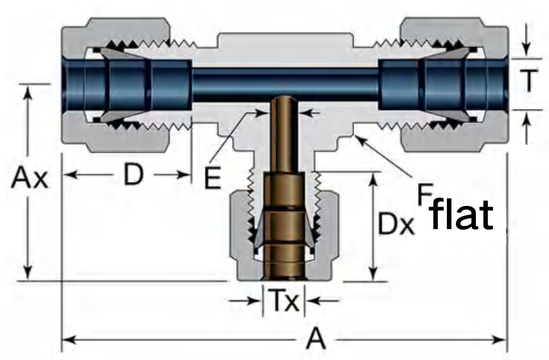

Reducing Union Tee

Tube OD		Basic Ordering Number	Dimensions,in.					
T (in)	Tx (in)		A	Ax	D	Dx	E	F
3/8	1/4	SKTT-6-4-6	2.40	1.14	0.66	0.60	0.19	5/8
1/2	1/4	SKTT-8-4-8	2.84	1.25	0.90	0.60	0.19	13/16
	3/8	SKTT-8-6-8		1.31		0.66	0.28	
5/8	3/8	SKTT-10-6-10	3.06	1.42	0.96	0.66	0.28	1
3/4	3/8	SKTT-12-6-12	3.14	1.46	0.96	0.66	0.28	1 1/16
	1/2	SKTT-12-8-12		1.57		0.90	0.41	
1	3/8	SKTT-16-6-16	3.86	1.65	1.23	0.66	0.28	1 3/8
	1/2	SKTT-16-8-16		1.76		0.90	0.41	
	3/4	SKTT-16-12-16		1.76		0.96	0.62	
1 1/4	1	SKTT-20-16-20	5.34	2.17	1.62	1.23	0.88	1 11/16
1 1/2	1	SKTT-24-16-24	6.20	2.36	1.97	1.23	0.88	2
2	1	SKTT-32-16-32	8.44	2.79	2.66	1.23	0.88	2 3/4

NOTE: Dimensions subject to change, to be used for reference only.For detailed parameters, please consult HAL technical support.

Reducing Union Tee

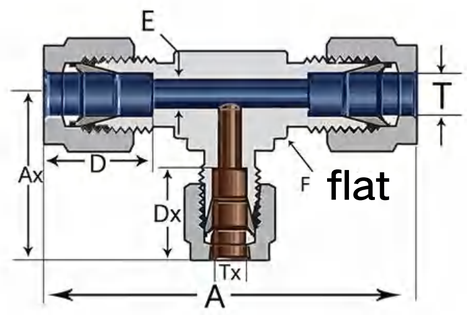

Tube OD		Basic Ordering Number	Dimensions,mm					
T (mm)	Tx (mm)		A	Ax	D	Dx	E	F
3	6	SKTT-3M-6M-3M	49.3	26.9	12.9	15.3	2.4	1/2
8		SKTT-8M-6M-8M	59.9	29.0	16.2		4.8	5/8
10		SKTT-10M-6M-10M	63.0	29.7	17.2		4.8	11/16
12		SKTT-12M-6M-12M	72.0	31.8	22.8		4.8	13/16
15	12	SKTT-15M-12M-15M	77.7	38.9	24.4	22.8	9.5	1
16		SKTT-16M-12M-16M	77.6	38.9	24.4			1
18		SKTT-18M-12M-18M	79.8	39.9	24.4			1 1/16
22		SKTT-22M-12M-22M	89.4	44.7	26.0			1 3/8
25		SKTT-25M-12M-25M	98.0	44.7	31.3			1 3/8

Reducing Union Tee

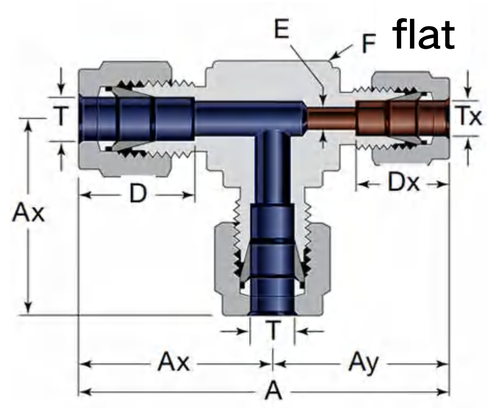

Tube OD		Basic Ordering Number	Dimensions,in.						
(in)	(in)		A	Ax	Ay	D	Dx	E	F
3/8	1/4	SKTT-6-6-4	2.34	1.20	1.14	0.66	0.60	0.19	5/8

Reducing Union Tee

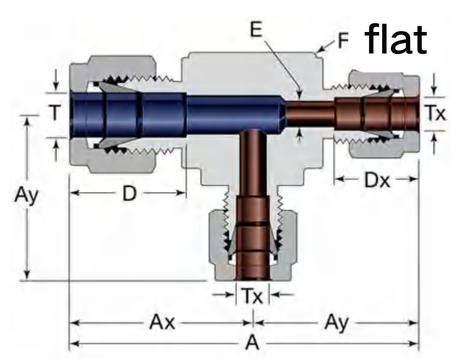

Tube OD		Basic Ordering Number	Dimensions,in.						
(in)	(in)		A	Ax	Ay	D	Dx	E	F
1/2	3/8	SKTT-8-6-6	2.73	1.42	1.31	0.90	0.66	0.28	13/16
5/8		SKTT-10-6-6	2.95	1.53	1.42	0.96			1
3/4		SKTT-12-6-6	3.03	1.57	1.46	0.96			1 1/16

NOTE: Dimensions subject to change, to be used for reference only.For detailed parameters, please consult HAL technical support.

Male Branch Tee

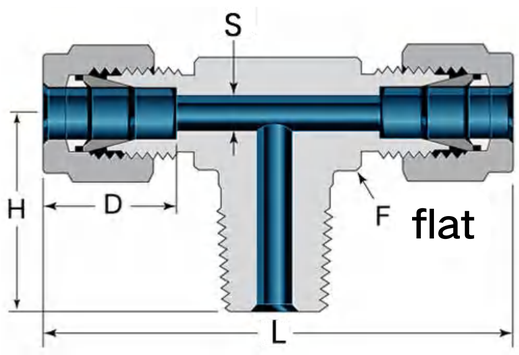

Tube OD	NPT	Basic Ordering Number	Dimensions,in.				
			L	D	S	F	H
1/8	1/8	SKNT-2-2N-2	1.91	0.55	0.14	7/16	0.75
	1/4	SKNT-2-4N-2	1.99			1/2	0.97
3/16	1/8	SKNT-3-2N-3	1.97	0.59	0.17	7/16	0.75
1/4	1/8	SKNT-4-2N-4	2.17	0.65	0.24	1/2	0.79
	1/4	SKNT-4-4N-4					0.97
5/16	1/8	SKNT-5-2N-5	2.39	0.69	0.24	5/8	0.87
3/8	1/4	SKNT-6-4N-6	2.45	0.71	0.33	5/8	1.05
	3/8	SKNT-6-6N-6	2.67			13/16	1.16
1/2	3/8	SKNT-8-6N-8	2.89	0.95	0.43	13/16	1.16
	1/2	SKNT-8-8N-8			0.46		1.35
5/8	1/2	SKNT-10-8N-10	3.11	1.01	0.52	1	1.46
3/4	3/4	SKNT-12-12N-12	3.19	1.01	0.67	1 1/16	1.45

Tube OD	NPT in.	Basic Ordering Number	Dimensions,mm				
			L	D	S	F	H
6	1/8	SKNT-6M-2N-6M	54.4	15.8	5.3	1/2	19.3
	1/4	SKNT-6M-4N-6M					23.9
8	1/8	SKNT-8M-2N-8M	60.2	16.7	5.3	5/8	21.3
	1/4	SKNT-8M-4N-8M			6.9		25.9
10	1/4	SKNT-10M-4N-10M	67.5	17.7	7.6	13/16	26.7
12	3/8	SKNT-12M-6N-12M	72.5	23.3	10.0	13/16	28.7
	1/4	SKNT-12M-4N-12M			7.6		28.7
	1/2	SKNT-12M-8N-12M			10.0		33.5
16	1/2	SKNT-16M-8N-16M	78.1	24.9	12.4	1	36.3

NOTE: If ordering R threads, add RT to the ordering number.
Example:SKNT-2-2RT-2
Example:SKNT-2-2-2RT

Male Run Tee

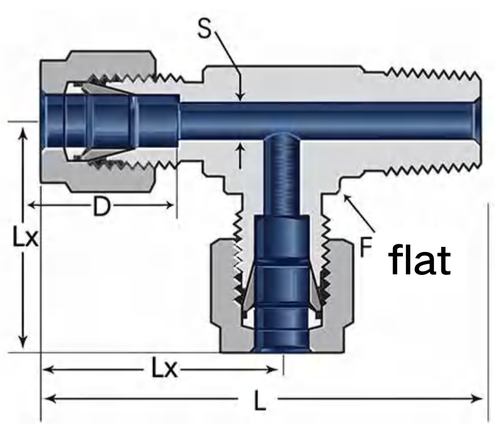

Tube OD	NPT	Basic Ordering Number	Dimensions,in.				
			L	Lx	D	S	F
1/8	1/8	SKNJ-2-2-2N	1.68	0.98	0.55	0.14	7/16
	1/4	SKNJ-2-2-4N	1.94	1.02			1/2
3/16	1/8	SKNJ-3-3-2N	1.71	1.01	0.59	0.17	7/16
1/4	1/8	SKNJ-4-4-2N	1.85	1.11	0.65	0.24	1/2
	1/4	SKNJ-4-4-4N	2.03				
5/16	1/8	SKNJ-5-5-2N	2.04	1.22	0.69	0.24	5/8
3/8	1/4	SKNJ-6-6-4N	2.25	1.25	0.71	0.33	5/8
	3/8	SKNJ-6-6-6N	2.47	1.36			13/16
1/2	3/8	SKNJ-8-8-6N	2.58	1.47	0.95	0.43	13/16
	1/2	SKNJ-8-8-8N	2.77			0.46	
5/8	1/2	SKNJ-10-10-8N	2.93	1.55	1.01	0.52	15/16
3/4	3/4	SKNJ-12-12-12N	3.07	1.62	1.01	0.67	1 1/16

Tube OD	NPT in.	Basic Ordering Number	Dimensions,mm				
			L	Lx	D	S	F
6	1/8	SKNJ-6M-6M-2N	46.3	27.5	15.8	5.3	1/2
	1/4	SKNJ-6M-6M-4N	50.8				
8	1/4	SKNJ-8M-8M-4N	55.8	30.4	16.7	6.9	5/8
12	1/4	SKNJ-12M-12M-4N	64.7	36.5	23.3	7.6	13/16
	1/2	SKNJ-12M-12M-8N	69.5			10.0	
16	1/2	SKNJ-16M-16M-8N	73.6	38.5	24.9	12.4	15/16

NOTE: Dimensions subject to change, to be used for reference only.For detailed parameters, please consult HAL technical support.

Positionable Run ISO/BSP Parallel Thread

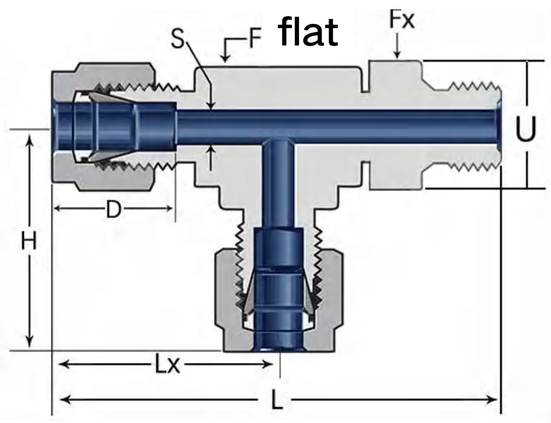

Tube OD	ISO Thread Size in.	Basic Ordering Number	Dimensions,in.						
			L	Lx	D	S	F	Fx	U
1/4	1/8	SKTR-4-4-2G	2.15	1.11	0.65	0.21	1/2	9/16	0.65
	1/4	SKTR-4-4-4G	2.46	1.19		0.24	5/8	3/4	0.85
3/8	1/4	SKTR-6-6-4G	2.52	1.25	0.71	0.28	5/8	3/4	0.85
1/2	3/8	SKTR-8-8-6G	2.93	1.47	0.95	0.36	13/16	7/8	1.01
	1/2	SKTR-8-8-8G	3.26	1.55		0.46	15/16	1 1/16	1.21
5/8	1/2	SKTR-10-10-8G	3.26	1.55	1.01	0.52	15/16	1 1/16	1.21
3/4	3/4	SKTR-12-12[illegible]G	3.54	1.62	1.01	0.67	1 1/16	1 3/8	1.48
	1/2	SKTR-12-12-8G	3.40			0.52		1 1/16	1.21
1	1	SKTR-16-16-16G	4.09	1.98	1.28	0.83	1 3/8	1 5/8	1.87

Tube OD	ISO Thread Size in.	Basic Ordering Number	Dimensions,mm						
			L	Lx	D	S	F	Fx	U
6	1/8	SKTR-6M-6M-2G	53.9	27.5	15.8	4.5	1/2	9/16	15.7
	1/4	SKTR-6M-6M-4G	61.7	29.5		5.3	5/8	3/4	20.8
8	1/8	SKTR-8M-8M-2G	56.8	29.3	16.7	4.5	9/16	9/16	15.7
	1/4	SKTR-8M-8M-4G	62.6	30.4		6.9	5/8	3/4	20.8
10	1/4	SKTR-10M-10M-4G	69.1	34.0	17.7	6.4	13/16	3/4	20.8
12	3/8	SKTR-12M-12M-6G	73.6	36.5	23.3	8.4	13/16	7/8	24.9
	1/2	SKTR-12M-12M-8G	82.0	38.5		10.0	15/16	1 1/16	29.3

NOTE: If ordering R threads, add RT to the ordering number.
Example:SKNC-2-2-2RT
Example:SKNC-6M-6M-2RT

Female Run Tee

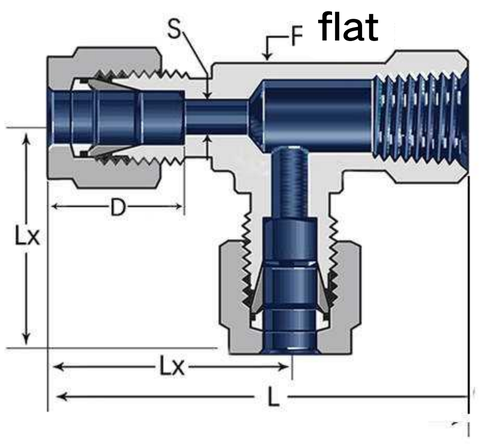

Tube OD	NPT Size	Basic Ordering Number	Dimensions,in.				
			L	Lx	D	S	F
1/8	1/8	SKNC-2-2-2N	1.72	0.97	0.50	0.09	1/2
1/4	1/8	SKNC-4-4-2N	1.81	1.06	0.60	0.19	1/2
	1/4	SKNC-4-4-4N	2.05	1.17			11/16
3/8	1/4	SKNC-6-6-4N	2.11	1.23	0.66	0.28	11/16
1/2	3/8	SKNC-8-8-6N	2.30	1.42	0.90	0.41	13/16
	1/2	SKNC-8-8-8N	2.69	1.57			1 1/16
3/4	3/4	SKNC-12-12-12N	3.01	1.76	0.96	0.62	1 3/8
1	3/4	SKNC-16-16-12N	3.18	1.93	1.23	0.88	1 3/8
	1	SKNC-16-16-16N	3.61	2.11			1 11/16

Tube OD	NPT Size in.	Basic Ordering Number	Dimensions,mm				
			L	Lx	D	S	F
6	1/8	SKNC-6M-6M-2N	46.0	27.0	15.3	4.8	1/2
	1/4	SKNC-6M-6M-4N	52.1	29.8			11/16
8	1/8	SKNC-8M-8M-2N	48.9	29.9	16.2	6.4	5/8
	1/4	SKNC-8M-8M-4N	53.0	30.6			11/16
10	1/4	SKNC-10M-10M-4N	55.9	33.5	17.2	7.9	13/16
12	1/4	SKNC-12M-12M-4N	58.4	36.0	22.8	9.5	13/16
	3/8	SKNC-12M-12M-6N	58.4	36.0		10.3	13/16
	1/2	SKNC-12M-12M-8N	68.3	39.8		9.5	1 1/16
16	1/2	SKNC-16M-16M-8N	68.2	39.8	24.4	12.7	1 1/16

NOTE: Dimensions subject to change, to be used for reference only.For detailed parameters, please consult HAL technical support.

Female Branch Tee

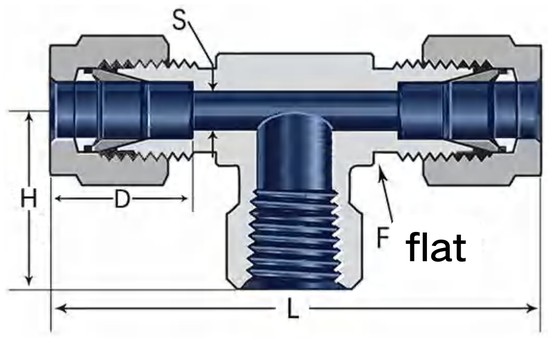

NOTE: If ordering R threads, add RT to the ordering number.
Example:SKNF-2-2RT-2
Example:SKNF-6M-2RT-6M

Tube OD	NPT Size in.	Basic Ordering Number	Dimensions,in.				
			L	D	S	F	H
1/8	1/8	SKNF-2-2N-2	1.99	0.55	0.14	1/2	0.80
1/4	1/8	SKNF-4-2N-4	2.17	0.65	0.24	1/2	0.80
	1/4	SKNF-4-4N-4	2.39			11/16	0.93
3/8	1/4	SKNF-6-4N-6	2.51	0.71	0.33	11/16	0.93
	3/8	SKNF-6-6N-6	2.67			13/16	0.93
	1/2	SKNF-6-8N-6	2.89			1	1.17
1/2	1/4	SKNF-8-4N-8	2.89	0.95	0.46	13/16	0.93
	3/8	SKNF-8-6N-8	2.89			13/16	0.93
	1/2	SKNF-8-8N-8	3.11			1	1.17
5/8	1/2	SKNF-10-8N-10	3.11	1.01	0.55	1	1.17
3/4	3/4	SKNF-12-12N-12	3.57	1.01	0.67	1 3/8	1.30
1	3/4	SKNF-16-12N-16	3.91	1.28	0.93	1 3/8	1.30
	1	SKNF-16-16N-16	4.27			1 11/16	1.55

Tube OD	NPT Size in.	Basic Ordering Number	Dimensions,mm				
			L	D	S	F	H
6	1/8	SKNF-6M-2N-6M	54.4	15.8	5.3	1/2	19.5
	1/4	SKNF-6M-4N-6M	60.0			11/16	22.9
8	1/8	SKNF-8M-2N-8M	60.2	16.7	6.9	5/8	19.5
	1/4	SKNF-8M-4N-8M	61.7			11/16	22.9
10	1/4	SKNF-10M-4N-10M	67.5	17.7	8.4	13/16	22.9
12	1/4	SKNF-12M-4N-12M	72.5	23.3	10.0	13/16	22.9
	3/8	SKNF-12M-6N-12M	72.5			13/16	22.9
	1/2	SKNF-12M-8N-12M	78.2			1	28.9
16	1/2	SKNF-16M-8N-16M	78.1	24.9	13.2	1	28.9

Union Cross

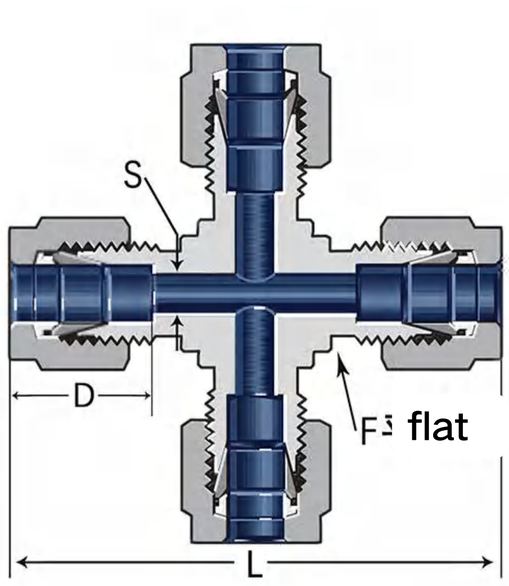

Tube OD	Basic Ordering Number	Dimensions,in.			
		L	D	S	F
1/8	SKTS-2	1.81	0.55	0.14	3/8
1/4	SKTS-4	2.17	0.65	0.24	1/2
5/16	SKTS-5	2.39	0.69	0.30	5/8
3/8	SKTS-6	2.45	0.71	0.33	5/8
1/2	SKTS-8	2.89	0.95	0.46	13/16
3/4	SKTS-12	3.19	1.01	0.67	1 1/16
1	SKTS-16	3.91	1.28	0.93	1 3/8

Tube OD	Basic Ordering Number	Dimensions,mm			
		L	D	S	F
3	SKTS-3M	45.2	13.4	2.9	3/8
6	SKTS-6M	54.4	15.8	5.3	1/2
8	SKTS-8M	60.2	16.7	6.9	5/8
10	SKTS-10M	67.5	17.7	8.4	13/16
12	SKTS-12M	72.5	23.3	10.0	13/16
16	SKTS-16M	74.5	24.9	13.2	15/16
18	SKTS-18M	77.1	24.9	15.6	1 1/16
20	SKTS-20M	89.8	26.5	16.4	1 3/8
22	SKTS-22M	89.9	26.5	18.8	5/8
25	SKTS-25M	98.8	31.8	22.3	1 3/8

NOTE: Dimensions subject to change, to be used for reference only.For detailed parameters, please consult HAL technical support.

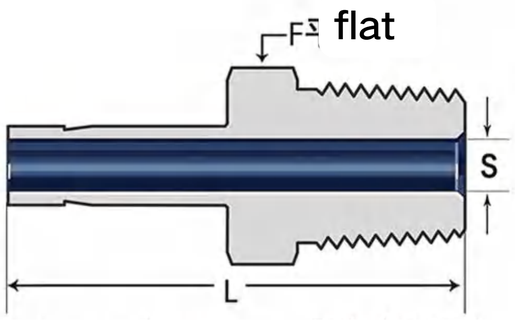

1 in./25 mm and under

Male Tube Adapter

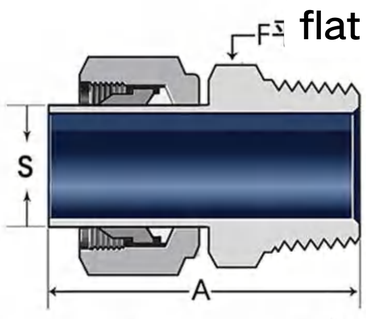

over 1 in./25 mm

Tube OD	NPT	Basic Ordering Number	Dimensions,in.		
			L	S	F
1/8	1/8	GNM-2-2N	1.21	0.13	7/16
	1/4	GNM-2-4N	1.42		9/16
3/16	1/8	GNM-3-2N	1.24	0.17	7/16
	1/4	GNM-3-4N	1.45		9/16
1/4	1/8	GNM-4-2N	1.30	0.22	7/16
	1/4	GNM-4-4N	1.51		9/16
	3/8	GNM-4-6N	1.54		11/16
	1/2	GNM-4-8N	1.76		7/8
5/16	1/2	GNM-5-8N	1.34	0.24	7/16
	1/4	GNM-5-4N	1.55	0.27	9/16
3/8	1/8	GNM-6-2N	1.37	0.24	7/16
	1/4	GNM-6-4N	1.58	0.32	9/16
	3/8	GNM-6-6N	1.61	0.32	11/16
	1/2	GNM-6-8N	1.83	0.32	7/8
1/2	1/4	GNM-8-4N	1.80	0.33	9/16
	3/8	GNM-8-6N	1.83	0.42	11/16
	1/2	GNM-8-8N	2.05	0.42	7/8
5/8	1/2	GNM-10-8N	2.11	0.52	7/8
3/4	1/2	GNM-12-8N	2.11	0.52	7/8
	3/4	GNM-12-12N		0.63	1 1/16
1	3/4	GNM-16-12N	2.36	0.67	1 1/16
	1	GNM-16-16N	2.65	0.85	1 3/8
1 1/4	1 1/4	GNM-20-20N	3.21	1.07	1 3/4
1 1/2	1 1/2	GNM-24-24N	3.77	1.30	2 1/8
2	2	GNM-32-32N	4.75	1.77	2 3/4

Tube OD	NPT	Basic Ordering Number	Dimensions,mm		
			L	S	F
6	1/8	GNM-6M-2N	33.3	4.6	12
	1/4	GNM-6M-4N	38.6		14
8	1/4	GNM-8M-4N	39.6	6.1	14
	3/8	GNM-8M-6N	40.4		19
10	1/4	GNM-10M-4N	40.4	7.6	14
	3/8	GNM-10M-6N	41.1		18
	1/2	GNM-10M-8N	46.7		22
12	1/4	GNM-12M-4N	47.0	7.6	16
	1/2	GNM-12M-8N	52.6	9.3	22
28	1	GNM-28M-16N	75.2	22.7	35
	1 1/4	GNM-28M-20N	76.7	23.0	46
30	1	GNM-30M-16N	79.7	22.7	41
	1 1/4	GNM-30M-20N	80.5	24.8	46
32	1 1/4	GNM-32M-20N	81.5	27.0	46
38	1 1/2	GNM-38M-24N	92.7	32.1	55

Tube OD	NPT	Basic Ordering Number	Dimensions,in.		
			A	S	F
1/8	1/8	GEM-2-2N	1.21	0.13	7/16
	1/4	GEM-2-4N	1.42		9/16
1/4	1/8	GEM-4-2N	1.30	0.22	7/16
	1/4	GEM-4-4N	1.51		9/16
3/8	1/4	GEM-6-4N	1.58	0.32	9/16
	3/8	GEM-6-6N	1.61		11/16
	1/2	GEM-6-8N	1.83		7/8
1/2	1/4	GEM-8-4N	1.80	0.33	9/16
	3/8	GEM-8-6N	1.83	0.42	11/16
	1/2	GEM-8-8N	2.05	0.42	7/8
3/4	3/4	GEM-12-12N	2.11	0.63	1 1/16
1	1	GEM-16-16N	2.65	0.85	1 3/8

Tube OD	NPT	Basic Ordering Number	Dimensions,mm		
			A	S	F
6	1/8	GEM-6M-2N	33.3	4.6	12
	1/4	GEM-6M-4N	38.6		14
8	1/4	GEM-8M-4N	39.6	6.1	14
10	1/4	GEM-10M-4N	40.4	7.6	14
	3/8	GEM-10M-6N	41.1		18
12	1/4	GEM-12M-4N	47.0	7.6	16
	3/8	GEM-12M-6N	46.7	9.3	18
	1/2	GEM-12M-8N	52.3	9.3	22
28	1	GEM-28M-16N	75.2	22.7	35
	1 1/4	GEM-28M-20N	76.7	23.0	46
30	1 1/4	GEM-30M-20N	80.5	24.8	46
32	1 1/4	GEM-32M-20N	81.5	27.0	46
38	1 1/2	GEM-38M-24N	92.7	32.1	55

NOTE: If ordering R threads, add RT to the ordering number.
Example:GNM2-2-2RT
Example:GNM-6M-2RT

NOTE: Dimensions subject to change, to be used for reference only.For detailed parameters, please consult HAL technical support.

Replacement Parts

Nuts

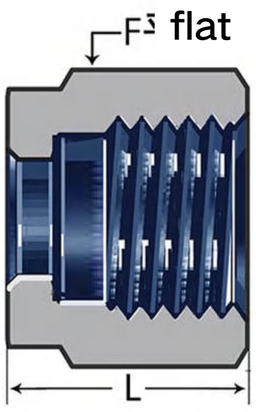

Tube OD	Ordering Number	F	L
in			
1/8	EN-2	7/16	0.55
3/16	EN-3	1/2	0.59
1/4	EN-4	9/16	0.65
5/16	EN-5	5/8	0.69
3/8	EN-6	11/16	0.71
1/2	EN-8	7/8	0.95
5/8	EN-10	1	1.01
3/4	EN-12	1 1/8	1.01
7/8	EN-14	1 1/4	1.07
1	EN-16	1 1/2	1.28
1 1/4	EN-20	1 7/8	1.67
1 1/2	EN-24	2 1/4	2.02
2	EN-32	3	2.71

Tube OD	Ordering Number	F	L
mm			
2	EN-2M	12	11.9
3	EN-3M	12	11.9
4	EN-4M	12	11.9
6	EN-6M	14	12.7
8	EN-8M	16	13.5
10	EN-10M	19	15.1
12	EN-12M	22	17.4
14	EN-14M	25	17.4
15	EN-15M	25	17.4
16	EN-16M	25	17.4
18	EN-18M	30	17.4
20	EN-20M	32	17.4
22	EN-22M	32	17.4
25	EN-25M	38	20.6
28	EN-28M	46	30.6
30	EN-30M	50	32.7
32	EN-32M	50	34.4
38	EN-38M	60	40.6
50	EN-50M	75	52.3

Front Ferrule

Tube OD	Ordering Number
[illegible]	
1/8	QKT-2
3/16	QKT-3
1/4	QKT-4
5/16	QKT-5
3/8	QKT-6
1/2	QKT-8
5/8	QKT-10
3/4	QKT-12
7/8	QKT-14
1	QKT-16
1 1/4	QKT-20
1 1/2	QKT-24
2	QKT-32

Tube OD	Ordering Number
[illegible]	
2	QKT-2M
3	QKT-3M
4	QKT-4M
6	QKT-6M
8	QKT-8M
10	QKT-10M
12	QKT-12M
14	QKT-14M
15	QKT-15M
16	QKT-16M
18	QKT-18M
20	QKT-20M
22	QKT-22M
25	QKT-25M
28	QKT-28M
30	QKT-30M
32	QKT-32M
38	QKT-38M
50	QKT-50M

Back Ferrule

Tube OD	Ordering Number
[illegible]	
1/8	HKT-2
3/16	HKT-3
1/4	HKT-4
5/16	HKT-5
3/8	HKT-6
1/2	HKT-8
5/8	HKT-10
3/4	HKT-12
7/8	HKT-14
1	HKT-16
1 1/4	HKT-20
1 1/2	HKT-24
2	HKT-32

Tube OD	Ordering Number
[illegible]	
2	HKT-2M
3	HKT-3M
4	HKT-4M
6	HKT-6M
8	HKT-8M
10	HKT-10M
12	HKT-12M
14	HKT-14M
15	HKT-15M
16	HKT-16M
18	HKT-18M
20	HKT-20M
22	HKT-22M
25	HKT-25M
28	HKT-28M
30	HKT-30M
32	HKT-32M
38	HKT-38M
50	HKT-50M

- Live-loaded, two-ferrule design.
- Easy to install.
- No torque is transmitted to tubing during installation.
- Gap inspection gauge ensures sufficient pull-up upon initial installation.

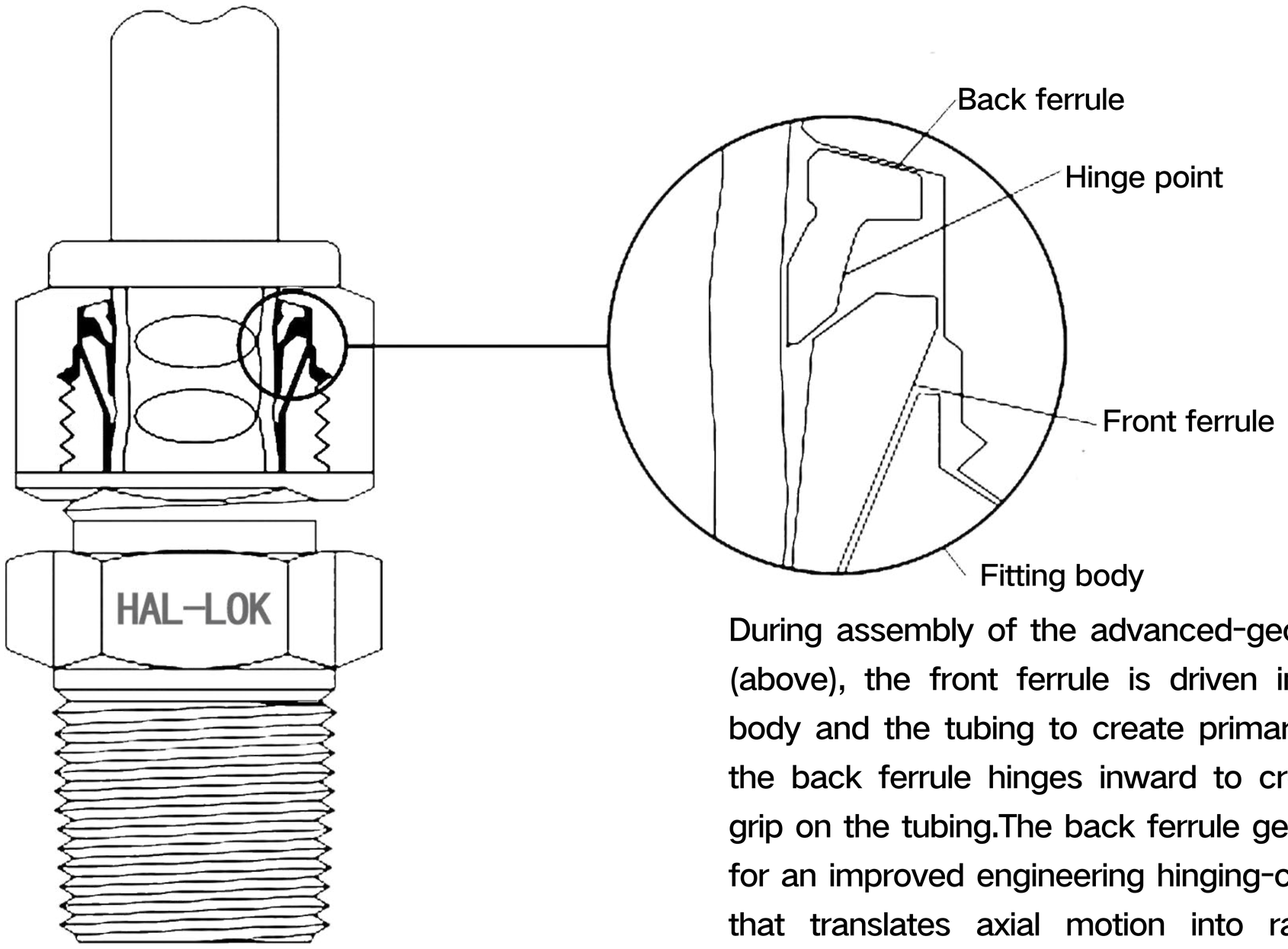

During assembly of the advanced-geometry design (above), the front ferrule is driven into the fitting body and the tubing to create primary seals, while the back ferrule hinges inward to create a strong grip on the tubing.The back ferrule geometry allows for an improved engineering hinging-colleting action that translates axial motion into radial swaging action on the tube, yet operates with a low assembly torque requirement..

The HAL-LOK Tube Fitting Advantage

Gas seal

Burnishing and polishing action of the front ferrule creates concentrated zones of contact on the tube and on the body bevel for a stronger seal.

Interchange

HAL-LOK tube fittings can be interchanged with other fittings manufactured in accordance with international standards.

Corrosion

With the company's own special hardening process, HAL-LOK ferrules have high strength and corrosion resistance, which has been fully proven through decades of application in multiple industrial fields.

Precision

HAL-LOK tube fitting are manufactured to precise tolerances.Without such precise tolerances,nut,ferrule and accessories will not work effectively together.

Two-Ferrule, Mechanical Grip Design

The two ferrules separate sealing and tube gripping functions; each ferrule is optimized for its function.

The front ferrule creates a seal:

- against the fitting body
- on the tubing outside diameter.

As the nut is turned, the back ferrule:

- axially advances the front ferrule
- radially applies an effective tube grip.

Gaugeability

On initial installation, the gap inspection gauge assures the installer or inspector that a fitting has been sufficiently tightened.

Position the gap inspection gauge next to the gap between the nut and body.

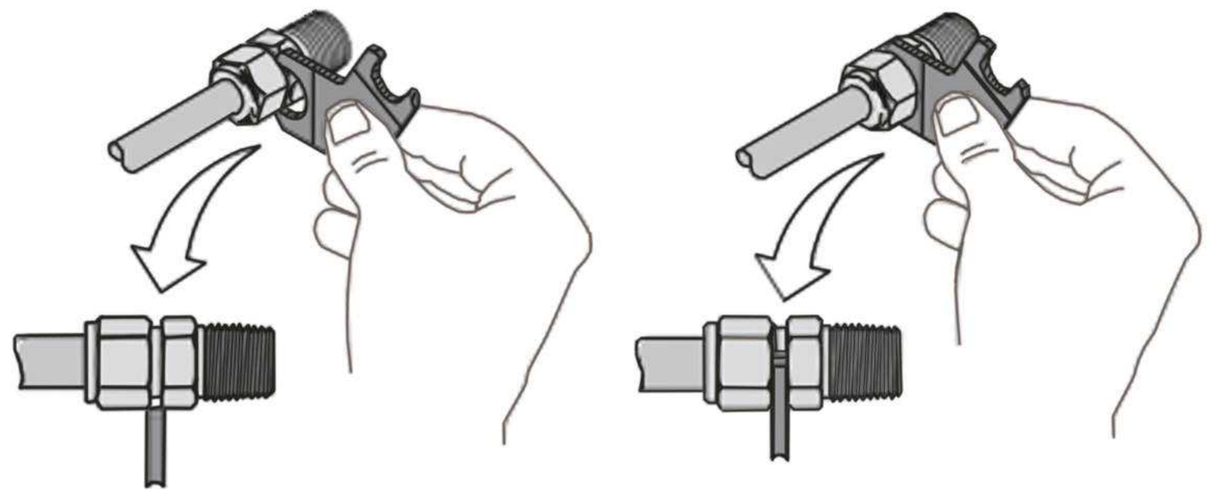

If the gauge will not enter the gap, the fitting is sufficiently tightened.

If the gauge will enter the gap, additional tightening is required.

Always depressurize a system before adjusting the tightness of a tube fitting connection.

Installation Instructions

Tube fittings 1 in./25 mm and smaller can be installed quickly, easily, and reliably with simple hand tools.Over 1 in./25 mm sizes require use of a hydraulic swaging unit to swage the ferrules onto the tubing.

Safety Precautions

- Do not bleed system by loosening fitting nut or fitting plug
- Do not assemble or tighten fittings when system is pressurized
- Make sure that the tubing rests firmly on the shoulder of the tube fitting body before tightening the nut.
- Use the gap inspection gauge to ensure sufficient pull-up upon initial installation.
- Always use proper thread sealants on tapered pipe threads.
- Do not mix materials or fitting components from various manufacturers—tubing, ferrules, nuts, and fitting bodies
- Never turn fitting body. Instead, hold fitting body and turn nut.
- Avoid unnecessary disassembly of unused fittings
- Use only long reducers in female end connections.

Tubing Considerations

- Metal tubing material should be softer than fitting material. For example, stainless steel tubing should not be used with brass fittings.
- When tubing and fittings are made of the same material, tubing must be fully annealed.
- Always use an insert with extremely soft or pliable plastic tubing.
- Extremes of wall thickness should always be checked against the suggested minimum and maximum wall thickness limitations.
- Surface finish is very important to proper sealing. Tubing with any kind of depression, scratch, raised portion, or other surface defect will be difficult to seal, particularly in gas service.
- Tubing that is oval and will not easily fit through fitting nuts, ferrules, and bodies should never be forced into the fitting.

Stainless Steel Seamless Tubing

Element	316 / 316L	304 / 304L
	Composition, wt. %	
Chromium	16.0 to 18.0	18.0 to 20.0
Nickel	11.0 to 14.0	8.0 to 11.0
Molybdenum	2.00 to 3.00	——
Manganese	2.00 max	2.00 max
Silicon	0.75 max	0.75 max
Carbon	0.035 max	0.035 max
Sulfur	0.030 max	0.030 max

- Standard instrumentation tubing
- Chemically cleaned and passivated tubing
- Thermocpuple-cleanded tubing

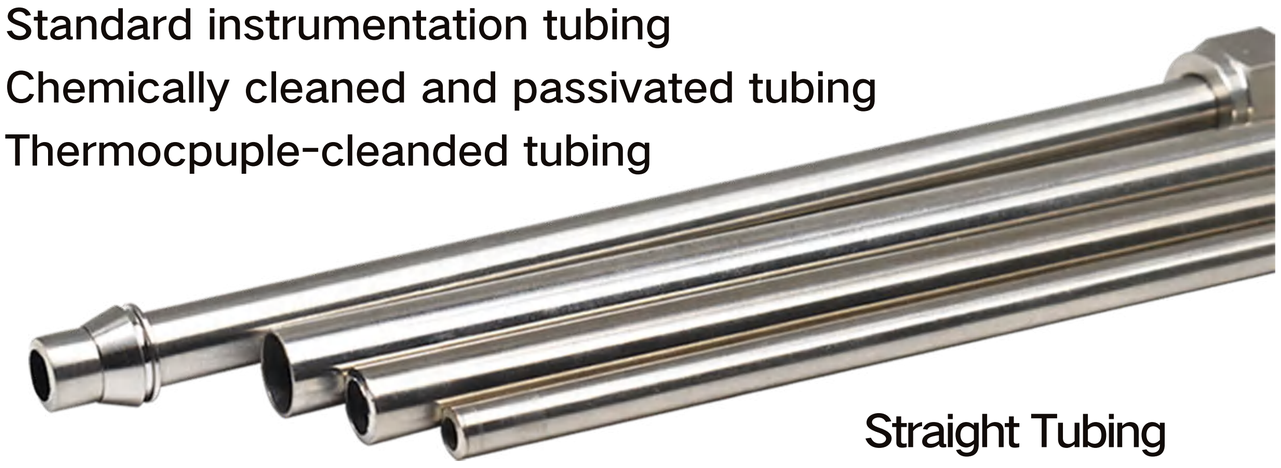

Straight Tubing

Tube OD in.	Tube Wall Thickness in.	Ordering Number	Length M	Weight KG/M
1/8	0.028	YZ-KTG-3.175*0.7	2M	0.029
1/4	0.035	YZ-KTG-6.35*0.89		0.080
	0.049	YZ-KTG-6.35*1.24		0.105
	0.065	YZ-KTG-6.35*1.65		0.128
3/8	0.035	YZ-KTG-9.53*0.89		0.127
	0.049	YZ-KTG-9.53*1.24		0.171
	0.065	YZ-KTG-9.53*1.65		0.215
1/2	0.035	YZ-KTG-12.7*0.89		0.174
	0.049	YZ-KTG-12.7*1.24	4M	0.236
	0.065	YZ-KTG-12.7*1.65		0.302
5/8	0.065	YZ-KTG-15.87*1.65		0.389
3/4	0.065	YZ-KTG-19.05*1.65	6M	0.476
1	0.083	YZ-KTG-25.4*2.14		0.813
1 1/4	0.095	YZ-KTG-31.75*2.41		1.187
	0.120	YZ-KTG-31.75*3		1.473
1 1/2	0.120	YZ-KTG-38.1*3		1.792
	0.134	YZ-KTG-38.1*3.4		1.981
2	0.134	YZ-KTG-50.8*3.4		2.705
	0.188	YZ-KTG-50.8*4.77		3.686

Tube OD mm	Tube Wall Thickness mm	Ordering Number	Length M	Weight KG/M	Working Pressure bar
3	0.5	GZ-KTG-3*0.5	2M	0.021	340
	0.7	GZ-KTG-3*0.7		0.027	560
6	1.0	GZ-KTG-6*1		0.125	420
	1.5	GZ-KTG-6*1.5		0.169	710
8	1.0	GZ-KTG-8*1		0.175	310
	1.5	GZ-KTG-8*1.5		0.244	520
10	1.0	GZ-KTG-10*1		0.225	240
	1.5	GZ-KTG-10*1.5		0.319	400
12	1.0	GZ-KTG-12*1		0.275	200
	1.5	GZ-KTG-12*1.5		0.394	330
	2.0	GZ-KTG-12*2	4M	0.500	470
16	1.0	GZ-KTG-16*1		0.375	140
	1.5	GZ-KTG-16*1.5	6M	0.507	230
	2.0	GZ-KTG-16*2		0.651	330
18	1.0	GZ-KTG-18*1		0.425	120
	1.5	GZ-KTG-18*1.5		0.619	200
	2.0	GZ-KTG-18*2		0.801	290
20	2.0	GZ-KTG-20*2		0.901	260
22	2.0	GZ-KTG-22*2		1.00	230
25	2.0	GZ-KTG-25*2		1.15	200
	2.5	GZ-KTG-25*2.5		1.41	260

Coil Tube

Stainless Steel Coil Tube

Dimensions,in.		Dimensions,mm	
Tube OD	Ordering Number	Tube OD	Ordering Number
1/16	YZ-PG-1	3	GZ-PG-3M
1/8	YZ-PG-2	6	GZ-PG-6M
1/4	YZ-PG-4	8	GZ-PG-8M
3/8	YZ-PG-6	10	GZ-PG-10M
1/2	YZ-PG-8	12	GZ-PG-12M

One-Piece Instrumentation Ball Valves

How To Order

Select an oedering number Example:YBQF-2
Add a material designator. Example： YBQF-2-SS

Material	Designator
316 SS	SS
Brass	B
Titanium	Ti

Material	Designator
Alloy C-276	HC
Alloy 20	C20
PTFE	T

- On-off, switching, and crossover flow paths
- Working pressures up to 1000 psig
- Temperatures from －4 to 212 ° F (－20 to 100 ° C)
- Environmental and heated-process applications
- 1/8 to 3/4 in. and 3 to 25 mm end connections

2-Way Straight-Pattern

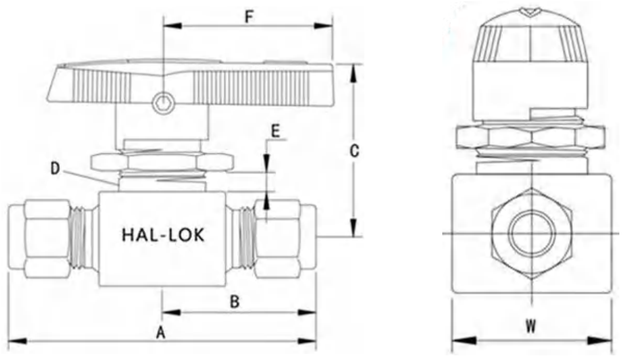

Ordering Number	Tube OD	Orifice	C_V	Dimensions						
				A	B	C	D	E	F	G
Dimensions,in.										
YBQF-2	1/8	0.09	0.15	2.02	1.01	1.37	0.60	1/4	1.27	0.59
YBQF-3	3/16	0.13	0.35	2.21	1.11	1.37	0.60	1/4	1.27	0.59
YBQF-4	1/4	0.19	0.90	2.37	1.19	1.48	0.79	1/4	1.27	0.79
YBQF-6	3/8	0.28	2.00	2.88	1.45	2.08	1.14	3/8	1.51	1.13
YBQF-8	1/2	0.41	4.60	3.49	1.75	2.45	1.51	3/8	2.37	1.51
Dimensions,mm										
YBQF-3M	3	2.4	0.15	51.1	25.6	34.6	15.2	6.5	32.1	14.8
YBQF-6M	6	4.8	0.90	60.1	30.1	37.4	15.2	6.5	32.1	19.9
YBQF-8M	8	4.8	0.90	62.6	31.3	37.4	19.9	6.5	38.2	19.9
YBQF-10M	10	7.1	2.00	73.1	36.6	52.6	28.8	9.8	43.1	28.6
YBQF-12M	12	10.3	4.60	88.6	44.3	62.1	38.2	9.8	60.1	38.2

Panel hole size：15mm（1/8）；15mm（1/4）；17mm（3/8）；20mm（1/2）

2-Way Angle-Pattern

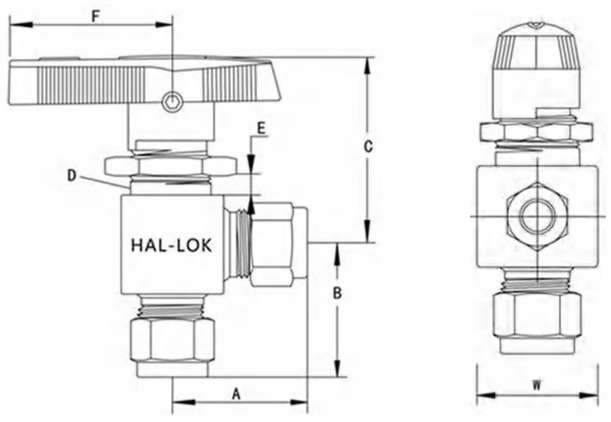

Ordering Number	Tube OD	Orifice	C_V	Dimensions						
				A	B	C	D	E	F	G
Dimensions,in.										
JTK-2	1/8	0.09	0.15	1.02	1.02	1.37	0.60	1/4	1.27	0.59
JTK-3	3/16	0.13	0.35	1.11	1.11	1.37	0.60	1/4	1.27	0.59
JTK-4	1/4	0.19	0.90	1.21	1.21	1.48	0.79	1/4	1.27	0.79
JTK-6	3/8	0.28	2.00	1.46	1.46	2.08	1.14	3/8	1.51	1.13
JTK-8	1/2	0.41	4.60	1.75	1.75	2.45	1.51	3/8	2.37	1.51
Dimensions,mm										
JTK-3M	3	2.4	0.15	25.6	25.6	34.6	15.2	6.5	32.1	14.8
JTK-6M	6	4.8	0.90	30.1	30.1	37.4	15.2	6.5	32.1	19.9
JTK-8M	8	4.8	0.90	31.3	31.3	37.4	19.9	6.5	38.2	19.9
JTK-10M	10	7.1	2.00	36.6	36.6	52.6	28.8	9.8	43.1	28.6
JTK-12M	12	10.3	4.60	44.3	44.3	62.1	38.2	9.8	60.1	38.1

Panel hole size：15mm（1/8）；15mm（1/4）；17mm（3/8）；20mm（1/2）

One-Piece Instrumentation Ball Valves

How To Order

Select an oedering number Example:YPSL-2
Add a material designator. Example: YPSL-2-SS

Material	Designator	Material	Designator
316 SS	SS	Alloy C-276	HC
Brass	B	Alloy 20	C20
Titanium	Ti	PTFE	T

- On-off, switching, and crossover flow paths
- Working pressures up to 1000 psig
- Temperatures from −4 to 212 ° F (−20 to 100 ° C)
- Environmental and heated-process applications
- 1/8 to 3/4 in. and 3 to 25 mm end connections

3-Way Ball Valve

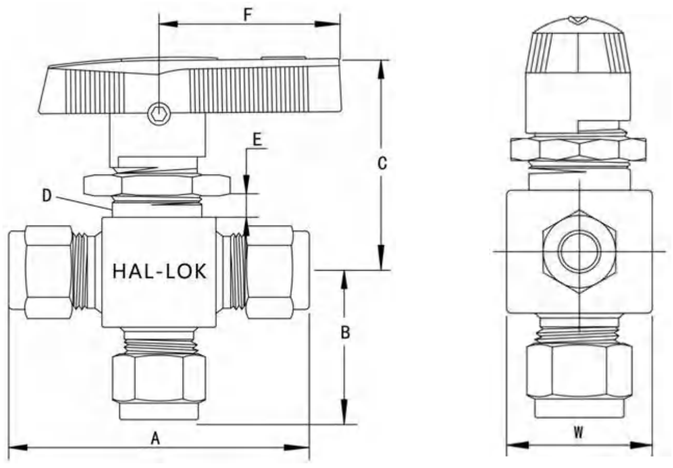

Ordering Number	Tube OD	Orifice	C_V	Dimensions						
				A	B	C	D	E	F	G
Dimensions,in.										
YPSL- 2	1/8	0.09	0.15	2.02	1.01	1.37	0.60	1/4	1.27	0.59
YPSL- 3	3/16	0.13	0.35	2.21	1.11	1.37	0.60	1/4	1.27	0.59
YPSL- 4	1/4	0.19	0.90	2.37	1.19	1.48	0.79	1/4	1.27	0.79
YPSL- 6	3/8	0.28	2.00	2.88	1.45	2.08	1.14	3/8	1.51	1.13
YPSL- 8	1/2	0.41	4.60	3.49	1.75	2.45	1.51	3/8	2.37	1.51
Dimensions,mm										
YPSL-3M	3	2.4	0.15	51.1	25.6	34.6	15.2	6.5	32.1	14.8
YPSL-6M	6	4.8	0.90	60.1	30.1	37.4	15.2	6.5	32.1	19.9
YPSL-8M	8	4.8	0.90	62.6	31.3	37.4	19.9	6.5	38.2	19.9
YPSL-10M	10	7.1	2.00	73.1	36.6	52.6	28.8	9.8	43.1	28.6
YPSL-12M	12	10.3	4.60	88.6	44.3	62.1	38.2	9.8	60.1	38.2

Panel hole size: 15mm (1/8); 15mm (1/4); 17mm (3/8); 20mm (1/2)

Straight-Pattern Ball Valve (hexagonal body)

Ordering Number	Tube OD	Dimensions,mm		
		L	H	Orifice
YBQS-4	1/4 in.	80	42	4.2
YBQS-6	3/8 in.	80	42	6.4
YBQS-8	1/2 in.	92	54	10.3
YBQS-6M	6mm	80	42	4.2
YBQS-8M	8mm	80	42	6.4
YBQS-10M	10mm	92	54	10.3

NOTE: Dimensions subject to change, to be used for reference only.For detailed parameters, please consult HAL technical support.

High Pressure Ball Valves

How To Order

Select an oedering number Example:YQTT-2
Add a material designator. Example： YQTT-2-SS

Material	Designator
316 SS	SS
Brass	B
Titanium	Ti

Material	Designator
Alloy C-276	HC
Alloy 20	C20
PTFE	T

- On-off, switching, and crossover flow paths
- Working pressures up to 3000 psig
- Temperatures from －4 to 212 ° F (－20 to 100 ° C)
- Environmental and heated-process applications
- 1/8 to 3/4 in. and 3 to 25 mm end connections

Straight-Pattern Ball Valve

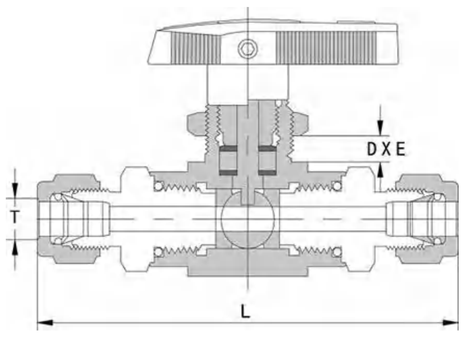

Ordering Number	Tube OD	Dimensions,mm		
		L	D x E	Orifice
YQTT-2	1/8	73	16 x 6.4	2.5
YQTT-4	1/4	85	16 x 6.4	4.3
YQTT-6	3/8	97	20 x 6.4	6.5
YQTT-8	1/2	105	16 x 6.6	10.4
YQTT-12	3/4	113	23 x 9.7	10.4
YQTT-3M	3mm	73	23 x 9.7	2.5
YQTT-4M	4mm	73	16 x 6.4	2.5
YQTT-6M	6mm	85	16 x 6.4	4.3
YQTT-8M	8mm	97	16 x 6.4	4.3
YQTT-10M	10mm	97	16 x 6.4	6.5
YQTT-12M	12mm	105	20 x 6.4	6.5
YQTT-14M	14mm	105	20 x 6.4	10.4
YQTT-16M	16mm	105	23 x 97	10.4
YQTT-18M	18mm	113	23 x 97	10.4
YQTT-20M	20mm	113	23 x 97	10.4

Panel hole size：16.5mm（1/8）；15mm（1/4）；17mm（3/8）；20mm（1/2）

3-Way Ball Valve

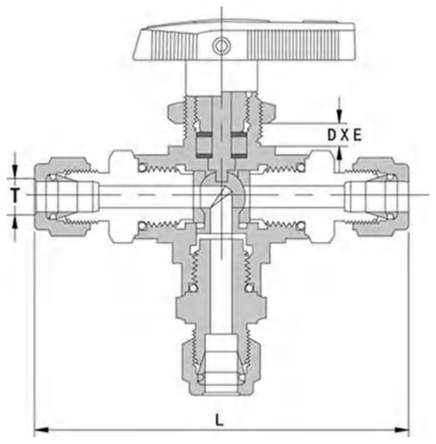

Ordering Number	Tube OD	Dimensions,mm		
		L	D x E	Orifice
YBQF3-2	1/8	73	16 x 6.4	2.5
YBQF3-4	1/4	85	16 x 6.4	4.3
YBQF3-6	3/8	97	20 x 6.4	6.5
YBQF3-8	1/2	105	16 x 6.6	10.4
YBQF3-12	3/4	113	23 x 9.7	10.4
YBQF3-3M	3mm	73	23 x 9.7	2.5
YBQF3-4M	4mm	73	16 x 6.4	2.5
YBQF3-6M	6mm	85	16 x 6.4	4.3
YBQF3-8M	8mm	97	16 x 6.4	4.3
YBQF3-10M	10mm	97	16 x 6.4	6.5
YBQF3-12M	12mm	105	20 x 6.4	6.5
YBQF3-14M	14mm	105	20 x 6.4	10.4
YBQF3-16M	16mm	105	23 x 97	10.4
YBQF3-18M	18mm	113	23 x 97	10.4
YBQF3-20M	20mm	113	23 x 97	10.4

NOTE: Dimensions subject to change, to be used for reference only.For detailed parameters, please consult HAL technical support.

High Pressure Ball Valves

How To Order

Select an oedering number Example:YQFN-2N
Add a material designator. Example: YQFN-2N-SS

Material	Designator	Material	Designator
316 SS	SS	Alloy C-276	HC
Brass	B	Alloy 20	C20
Titanium	Ti	PTFE	T

- On-off, switching, and crossover flow paths
- Working pressures up to 3000 psig
- Temperatures from −4 to 212 ° F (−20 to 100 ° C)
- Environmental and heated-process applications
- 1/8 to 3/4 in. and 3 to 25 mm end connections

Female Ball Valve

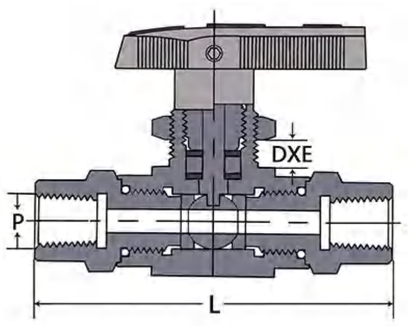

Ordering Number	Thread (P)	Dimensions,mm		
		L	DxE	Orifice
YQFN-2N	NPT1/8	64	16x6.4	2.4
YQFN-4N	NPT1/4	76	16x6.4	4.2
YQFN-6N	NPT3/8	94	20x6.4	6.4
YQFN-8N	NPT1/2	102	23x9.7	10.3
YQFN-2RT	R1/8	64	16x6.4	2.4
YQFN-4RT	R1/4	76	16x6.4	4.2
YQFN-6RT	R3/8	94	20x6.4	6.4
YQFN-8RT	R1/2	102	23x9.7	10.3

Male Ball Valve

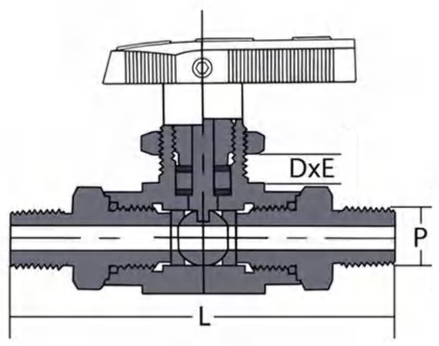

Ordering Number	Thread (P)	Dimensions,mm		
		L	DxE	Orifice
YQBM -2N	NPT1/8	64	16x6.4	2.4
YQBM -4N	NPT1/4	76	16x6.4	4.2
YQBM -6N	NPT3/8	94	20x6.4	6.4
YQBM -8N	NPT1/2	102	23x9.7	10.3
YQBM-2RT	R1/8	64	16x6.4	2.4
YQBM-4RT	R1/4	76	16x6.4	4.2
YQBM-6RT	R3/8	94	20x6.4	6.4
YQBM-8RT	R1/2	102	23x9.7	10.3

Panel hole size: 16.5mm (1/8); 15mm (1/4); 17mm (3/8); 20mm (1/2)

NOTE: Dimensions subject to change, to be used for reference only.For detailed parameters, please consult HAL technical support.

Instrumentation Needle Valves

How To Order

Select an oedering number Example:FMZF-2
Add a material designator. Example: FMZF-2-SS

Material	Designator	Material	Designator
316 SS	SS	Alloy C-276	HC
Brass	B	Alloy 20	C20
Titanium	Ti	PTFE	T

- Live-loaded packing system
- Compact design
- Working pressures up to 3000-6000 psig
- Temperatures from -4 to 392 ° F (-20 to 200 ° C)

Straight-Pattern

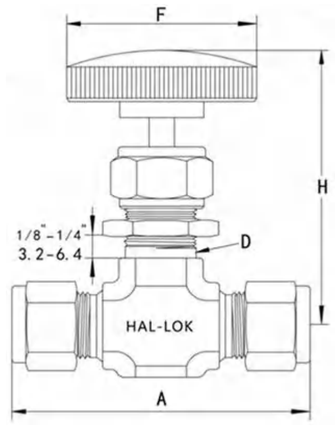

Ordering Number	Tube OD	Orifice	C_V	Dimensions			
				A	D	H	F
Dimensions,in.							
FMZF-2	1/8	0.080	0.09	1.98	0.48	2.29	1.01
FMZF-4	1/4	0.172	0.37	2.28	0.54	2.51	1.39
FMZF-6	3/8	0.200	0.74	2.59	0.79	2.98	1.89
FMZF-8	1/2	0.375	1.80	3.81	1.04	3.91	3.01
FMZF-12	3/4	0.375	1.80	3.81	1.04	3.91	3.01
Dimensions,mm							
FMZF-3M	3	2.0	0.09	49.4	12.3	58.0	25.5
FMZF-6M	6	4.4	0.37	57.8	13.6	63.6	35.2
FMZF-8M	8	4.4	0.37	59.5	13.6	63.6	35.2
FMZF-10M	10	6.4	0.73	66.1	19.9	75.5	4.9
FMZF-12M	12	9.5	1.80	96.6	26.3	99.2	76.3
FMZF-14M	14	9.5	1.80	96.60	26.3	99.2	76.3
FMZF-18M	18	9.5	1.80	96.60	26.3	99.2	76.3

Panel hole size: 15mm (1/8); 15mm (1/4); 17mm (3/8); 20mm (1/2)

Male Neddle Valve

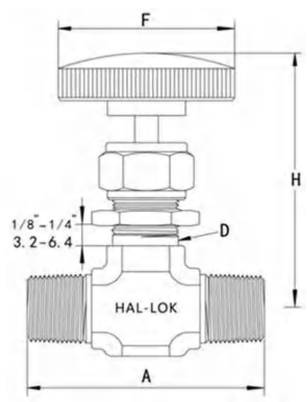

NOTE: If ordering R threads, add RT to the ordering number.
Example:FAZFM-2RT

Ordering Number	NPT	Orifice	C_V	Dimensions			
				A	D	H	F
Dimensions,in.							
FAZFM-2N	NPT1/8	0.080	0.09	1.89	0.48	2.29	1.01
FAZFM-4N	NPT1/4	0.250	0.73	2.13	0.79	2.98	1.89
FAZFM-6N	NPT3/8	0.375	1.80	3.01	1.04	3.89	3.01
FAZFM-8N	NPT1/2	0.375	1.80	3.01	1.04	3.89	3.01
FAZFM-12N	NPT3/4	0.375	1.80	3.01	1.04	3.89	3.01

Panel hole size: 15mm (NPT 1/8); 15mm (NPT 1/4); 17mm (NPT 3/8); 20mm (NPT 1/2)

NOTE: Dimensions subject to change, to be used for reference only.For detailed parameters, please consult HAL technical support.

Instrumentation Needle Valves

How To Order

Select an oedering number Example:FASS-2
Add a material designator. Example： FASS-2-SS

Material	Designator	Material	Designator
316 SS	SS	Alloy C-276	HC
Brass	B	Alloy 20	C20
Titanium	Ti	PTFE	T

- Live-loaded packing system
- Compact design
- Working pressures up to 3000-6000 psig
- Temperatures from -4 to 392 ° F (-20 to 200 ° C)

Angle-Pattern

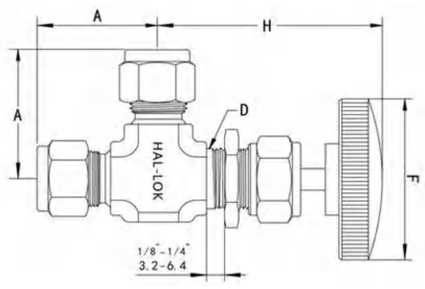

Ordering Number	Tube OD	Orifice	C_V	Dimensions			
				A	D	H	F
Dimensions,in.							
FASS-2	1/8	0.080	0.09	1.00	0.48	2.29	1.01
FASS-4	1/4	0.172	0.37	1.15	0.54	2.51	1.39
FASS-6	3/8	0.200	0.74	1.31	0.79	2.98	1.89
FASS-8	1/2	0.375	1.80	1.41	1.04	3.91	3.01
FASS-12	3/4	0.375	1.80	1.91	1.04	3.91	3.01
Dimensions,mm							
FASS-3M	3	2.0	25.2	49.4	12.3	58.0	25.5
FASS-6M	6	4.4	29.1	57.8	13.6	63.6	35.2
FASS-8M	8	4.4	33.1	59.5	13.6	63.6	35.2
FASS-10M	10	6.4	33.1	66.1	19.9	75.5	4.9
FASS-12M	12	9.5	35.7	96.6	26.3	99.2	76.3
FASS-14M	14	9.5	40.7	96.60	26.3	99.2	76.3
FASS-18M	18	9.5	48.4	96.60	26.3	99.2	76.3

Panel hole size：15mm（1/8）；15mm（1/4）；17mm（3/8）；20mm（1/2）

Female Needle Valve

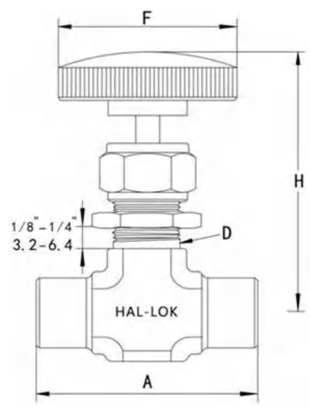

NOTE: If ordering R threads, add RT to the ordering number.
Example:FAZFF-2RT

Ordering Number	NPT	Orifice	C_V	Dimensions			
				A	D	H	F
Dimensions,in.							
FAZFF-2N	NPT1/8	0.080	0.09	1.89	0.48	2.29	1.01
FAZFF-4N	NPT1/4	0.250	0.73	2.13	0.79	2.98	1.89
FAZFF-6N	NPT3/8	0.375	1.80	3.01	1.04	3.89	3.01
FAZFF-8N	NPT1/2	0.375	1.80	3.01	1.04	3.89	3.01
FAZFF-12N	NPT3/4	0.375	1.80	3.01	1.04	3.89	3.01

Panel hole size：15mm（NPT 1/8）；15mm（NPT 1/4）；17mm（NPT 3/8）；20mm（NPT 1/2）

NOTE: Dimensions subject to change, to be used for reference only.For detailed parameters, please consult HAL technical support.

Relief Valve

RV series relief valves are proportional safety relief valves,obtain over-pressure protection for a variety of applications with the proportional relief valves with easy external set pressure adjustments. RV series relief valves OPEN when system pressure reaches the set pressure and CLOSE when system pressure falls below the set pressure;After heat treatment, the valve core has achieved higher surface finish and structural strength, resulting in better performance in resisting wear, dirt in the fluid, and service life.

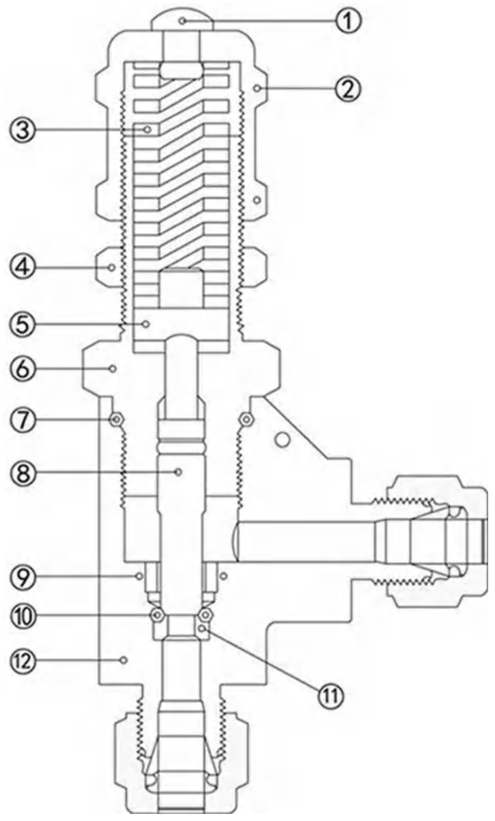

Materials of Construction

Number	Component	Material
1	Plug	PTFE
2	Cap	316SS
3	Spring	SWP-A
4	Lock nut	316SS
5	Spring Support	316SS
6	Bonnet	316SS
7	O-Ring	FKM
8	Stem Shaft	316SS/FKM
9	Seat Guide	316SS
10	O-Ring	FKM
11	Seat Retainer	316SS
12	Body	316SS

- 316 stainless steel structure
- Multiple springs for a selection of set pressure ranges
- 1/8 and 1/2 in. and 3 to 12 mm end connections
- Set pressures from 10 to 3000 psig
- Opening pressure error accuracy ±5%

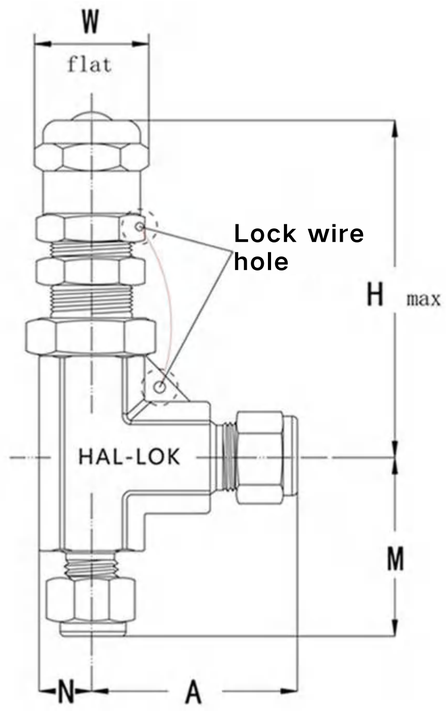

Ordering Number	Tube OD	Size mm	Dimensions				
			A	M	N	W	H
FCAT-3M	3mm	2.4	37.5	35	10.8	19	66.5
FCAT-02	1/8 in.		37.5	35			
FCAT-6M	6mm	4.8	39.7	36.2			
FCAT-04	1/4 in.		39.7	36.2			
FCAT-8M	8mm		41.3	37.8			

Female Relief Valve

Ordering Number	Size
FCAF-4N	1/4 NPT Female

Ordering Number	Size	Opening Pressure
FCTT-4N-20p	NPT1/4	20psi
FCTT-4N-100P		100psi
FCTT-4N-150P		150psi
FCTT-4N-250P		250psi

Straight-Pattern Relief Valve

NOTE: Dimensions subject to change, to be used for reference only.For detailed parameters, please consult HAL technical support.

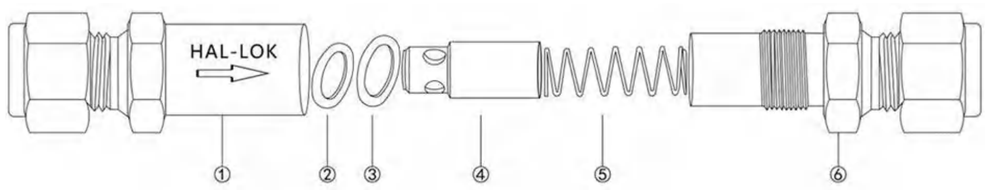

Number	Component	Valve Body Materials 316SS Material Grade/ASTM Specification
1	Inlet body	316SS/A479
2	O-Ring	Fluorocarbon FKM
3	Inlet gasket	316SS/A240
4	Poppet	316SS/A479
5	Spring	302SS/A313
6	Outlet body	316SS/A479

Opening Pressure (bar)
0.1
0.2
0.5

Note: The default opening pressure of the check valve is 0.2bar

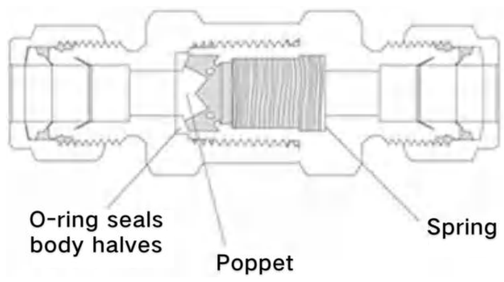

Check Valve With Ferrule

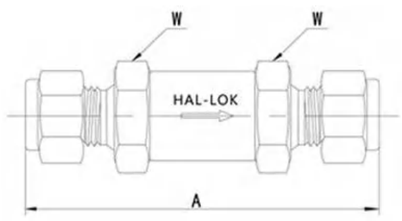

Ordering Number	Size	Dimensions A	Dimensions W
Dimensions,in.			
2C-SS	1/8	2.21	0.64
4C-SS	1/4	2.39	0.64
6C-SS	3/8	2.49	0.70
8C-SS	1/2	3.04	0.95
12C-SS	3/4	3.49	1.14
16C-SS	1	4.73	1.38
Dimensions,mm			
6C-MM-SS	6	60.6	15.98
10C-MM-SS	10	63.6	17.5
12C-MM-SS	12	77.1	23.9

Female And Male Check Valve

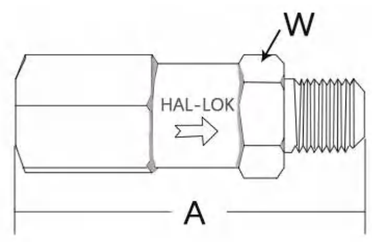

Ordering Number	Size (in.) Female	Size (in.) Male	Dimensions,mm A	Dimensions,mm W
4NFM-SS	NPT1/4	NPT1/4	60	19
6NFM-SS	NPT3/8	NPT3/8	78	23
8NFM-SS	NPT1/2	NPT1/2	92	27.5
12NFM-SS	NPT3/4	NPT3/4	106	33
4RFM-SS	RC1/4	RC1/4	60	19
6RFM-SS	RC3/8	RC3/8	78	23
8RFM-SS	RC1/2	RC1/2	92	27.5
12RFM-SS	RC3/4	RC3/4	106	33

Male Check Valve

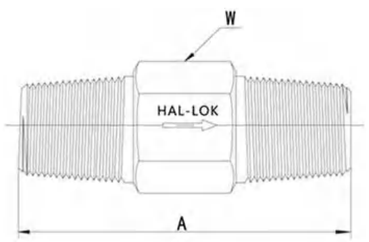

Size NPT in.	Ordering Number	Dimensions, mm A	Dimensions, mm W
1/8	2CN-SS	46	15.89
1/4	4CN-SS	58	19.06
3/8	6CN-SS	76	22.21
1/2	8CN-SS	91	27.01
3/4	12CN-SS	105	32.01
1	16CN-SS	123	41.21

Size RC in.	Ordering Number	Dimensions, mm A	Dimensions, mm W
1/8	2CR-SS	46	15.89
1/4	4CR-SS	58	19.06
3/8	6CR-SS	76	22.21
1/2	8CR-SS	91	27.01
3/4	12CR-SS	105	32.01
1	16CR-SS	123	41.21

Female Check Valve

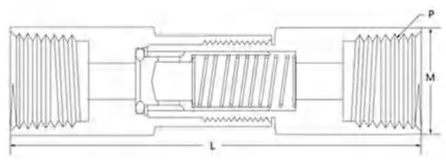

Size NPT in.	Ordering Number	Dimensions,mm P	Flow Orifice	M	L
1/8	2CFN-SS	9	6.2	17	46
1/4	4CFN-SS	12	6.6	19	57
3/8	6CFN-SS	15.5	8.4	22	60
1/2	8CFN-SS	19.3	10.5	27	68
3/4	12CFN-SS	24.8	14	32	80
1	16CFN-SS	30.4	30.4	\	\

Size RC in.	Ordering Number	Dimensions,mm P	Flow Orifice	M	L
1/8	2CFR-SS	9	6.2	17	46
1/4	4CFR-SS	12	6.6	19	57
3/8	6CFR-SS	15.5	8.4	22	60
1/2	8CFR-SS	19.3	10.5	27	68
3/4	12CFR-SS	24.8	14	32	80
1	16CFR-SS	30.4	30.4	\	\

NOTE: Dimensions subject to change, to be used for reference only.For detailed parameters, please consult HAL technical support.

Inline Filters

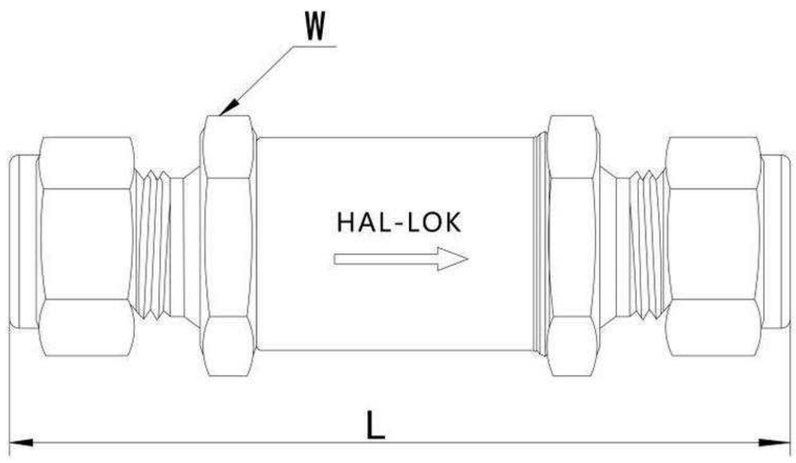

Note: The default filtration accuracy of inline filter is: 5μm

Ordering Number	Size	Dimensions	
		L	W
Dimensions,in.			
2M-SS	1/8	2.27	0.56
4M-SS	1/4	2.77	0.76
6M-SS	3/8	3.22	1.03
8M-SS	1/2	3.49	1.03
Dimensions,mm			
3M-MM-SS	3	57.6	14.1
6M-MM-SS	6	75.1	19.1
10M-MM-SS	10	81.6	26.1
12M-MM-SS	12	88.6	26.1

Component	Materials	
	Brass	316 SS
	Grade/ASTM Specification	
Body	Brass/B16	316 SS/A479
Bonnet nut	Brass/B16	316 SS/A479
Bonnet	Brass/B16	316 SS/A479
Element	316 SS	316SS
Spring	302 SS	302 SS
Gasket	Aluminum/B209	316 SS
Retaining ring	Stainless Steel/ A276	Stainless Steel/ A276
Ferrule nut	Stainless Steel/ A276	Stainless Steel/ A276
Ferrule set	Stainless Steel/ A276	Stainless Steel/ A276

Filtration Area

Type	Size	Sintered Element
直通	1/8in. 1/4in. 6mm	1.3(830mm²)
T型	1/8 in.	0.55(350mm²)
	1/4in. 6mm	1.3(830mm²)
	3/8in. 1/2in. 8-12mm	1.3(1280mm²)

Tee-Type Filters

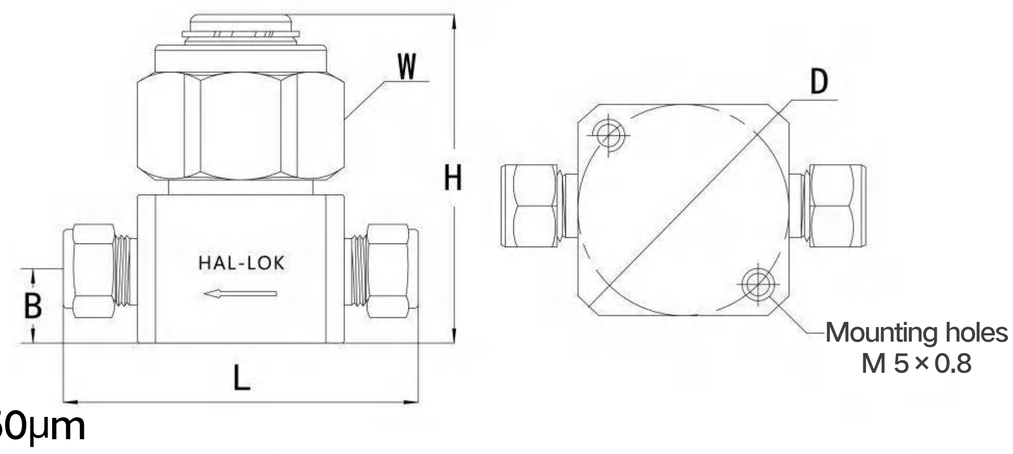

Note: The default filtration accuracy of tee type filter is: 50μm

Ordering Number	Size	Dimensions				
		L	H	B	D	W
Dimensions,in.						
HL-TK-2	1/8	2.25	1.88	0.40	1.01	1.01
HL-TK-4	1/4	2.49	1.88	0.40	1.01	1.01
HL-TK-6	3/8	2.84	2.21	0.47	1.14	1.14
HL-TK-8	1/2	3.04	2.21	0.47	1.14	1.14
Dimensions,mm						
HL-TK-6M	6	63.1	47.6	9.9	25.5	25.5
HL-TK-8M	8	72.1	56.1	11.7	25.5	25.5
HL-TK-10M	10	72.6	56.1	11.7	28.9	28.9
HL-TK-12M	12	77.1	56.1	11.7	28.9	28.9

NOTE: Dimensions subject to change, to be used for reference only.For detailed parameters, please consult HAL technical support.

Flashback Arrestor

Features

- High quality,corrosion resistant
- Flame Barrier
- Check Valve
- Inlet Filter

Applicable gases: Hydrogen, acetylene and other combustible gases

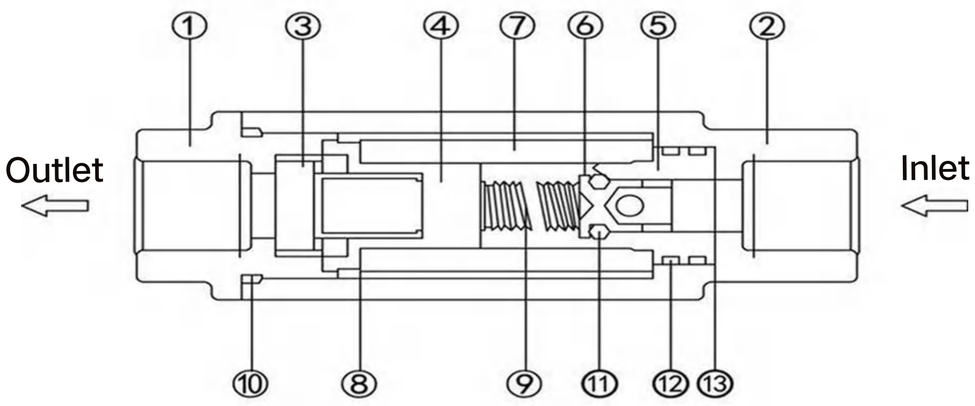

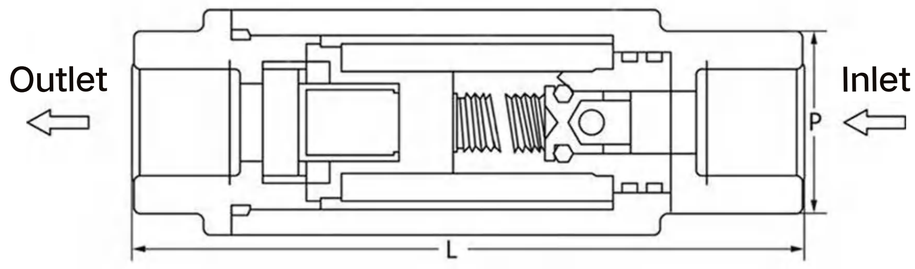

Number	Component	Model Number	Materials
1	Bonnet	FA2-FNT4-01	316L
2	Body	FA2-FNT4-02	316L
3	vent hole	FA2-FNT4-03	316L
4	Top block	FA2-FNT4-04	316L
5	Lower block	FA2-FNT4-05	316L
6	Piston	FA2-FNT4-06	316L
7	Strainer Element	FA2-FNT4-07	Stainless Steel Powder
8	Spring	RV-NT4-FNT4-06	316L
9	Spring	CV-FNT4-04	316L
10	O-ring	0-18×1.5	NBR
11	O-ring	0-4.5×18	FKM(60℃)
12	O-ring	0-13×1.5	FKM
13	Screen Strainer	SR12-13	316L

Flashback Arrestor (female)

Ordering Number	Size in.	Dimensions,mm	
		L	P
PG-4	NPT1/4	76	17
PG-6	NPT3/8	76	17
PG-8	NPT1/2	75	24
PG-12	NPT3/4	75	30

Flashback Arrestor (ferrule type)

Ordering Number	Size in.
HLGP-4	1/4
HLGP-6	3/8
HLGP-8	1/2
HLGP-12	3/4
HLGP-16	1"

Ordering Number	Size mm
HLGP-6M	6
HLGP-8M	8
HLGP-10M	10
HLGP-12M	12

NOTE: Dimensions subject to change, to be used for reference only.For detailed parameters, please consult HAL technical support.

HL8SL Series Stainless Steel Pressure Regulator

Features

- Single-stage pressure reducing structure
- Two pressure gauges
- The body and diaphragm are hard sealed
- Female thread: 1/4"NPT (F)
- The internal structure is easy to purge,built in filter screen
- Panel type or wall type installation can be adopted
- Needle valve and diaphragm valve can be selected for air outlet

Specifications

- Inlet pressure max.: 3000psig
- Outlet pressure: 0～25psig,0～50psig,0～100psig,0～250psig,0～500psig
- Operating temperature:-40 ° F~+165 ° (-40 ° C~+74 ° C)
- Proof pressure: 150% of Maximum rated pressure
- Leak rate: $2x10^{-8}$ atm cc/sec He
- Cv:0.08

Flow Data

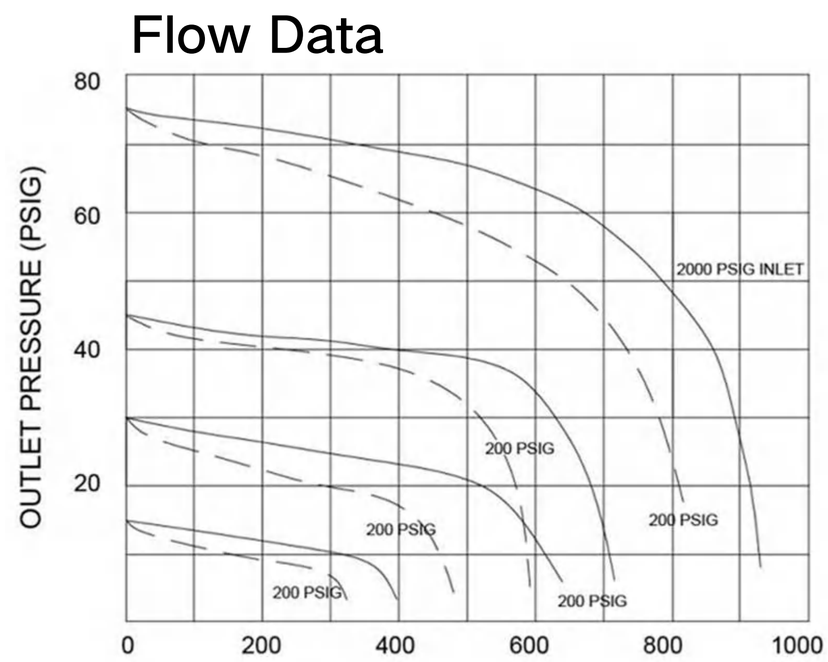

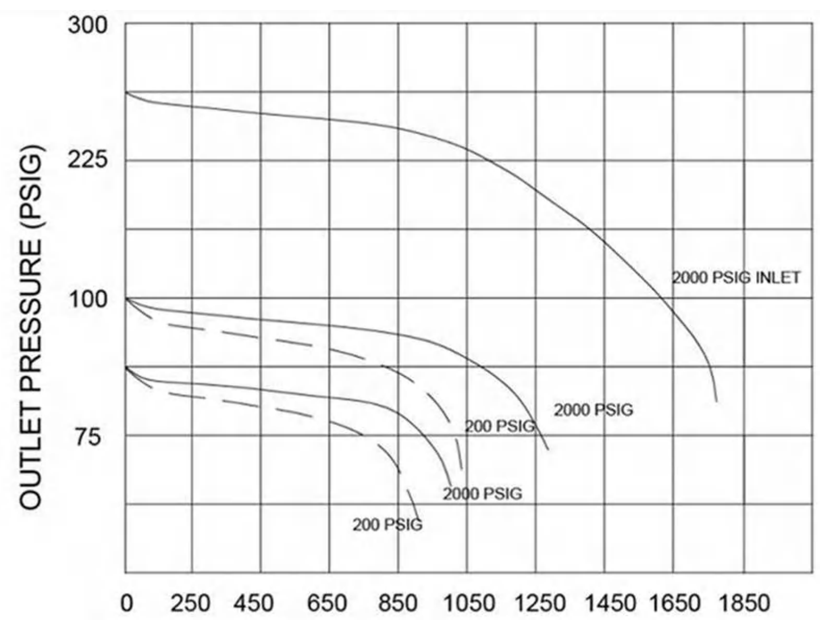

Materials Of Construction

- Body: SS316L
- Bonnet: 304 SS
- Diaphragm: Alloy C-276
- Valve seat：PCTFE
- Valve rod：SS316L

Dimensions

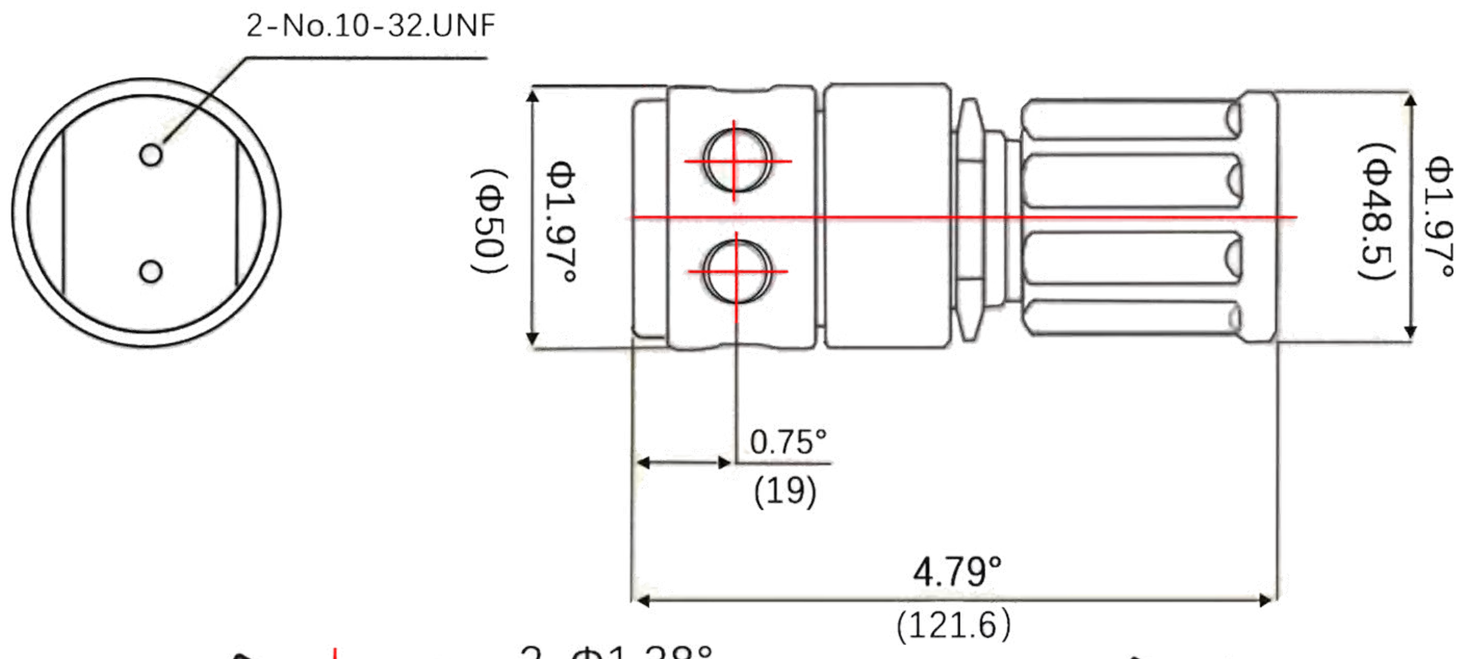

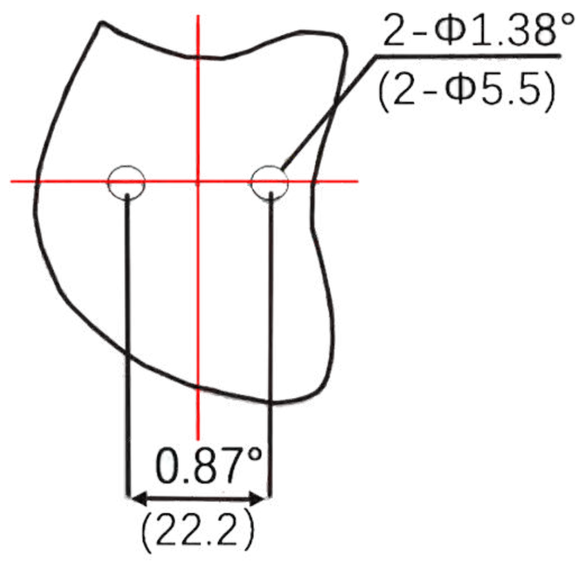

Backplane mounting dimension diagram

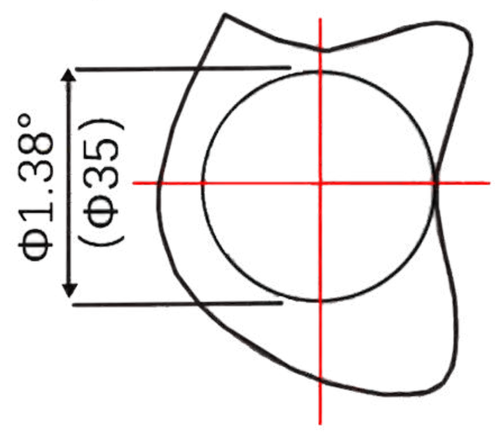

Panel mounting dimension diagram
（Maximum thickness 7mm）

Ordering Information

Serie	—	Outlet Gauge	—	Inlet Gauge
Example：HL8SL	—	Example：0-25Mpa	—	Example：0-1.6Mpa

So the order number is:HL8SL-25M-1.6M

Series	Body Materials	Body ports	Inlet pressure	Outlet pressure	Gauge	Inlet connection	Outlet connection	Option
HL8SL	SS316L	A	D：3000psig	H:0-150psig	G:With gauge	00:1/4"NPT(F)	00:1/4"NPT(F)	P:Panel mounting
		B	X:2200psig	I:0-100psig	(MPa)	01:1/4"NPT(M)	01:1/4"NPT(M)	R:Relief valve
		D	F:500psig	K:0-50psig	P:With pressure gauge	23:CGA330	10:1/8" Tube fittings	N:Needle valve
		G		L:0-25psig	(psi/bar)	24:CGA350	11:1/4" Tube fittings	D:Diaphragm valve
		J		M:0-15psig	W:Without gauge	27:CGA580	12:3/8" Tube fittings	
				Q:30"Hg Vac-30psig		28:CGA660	15:6mm Tube fittings	
				S:30"Hg Vac-60psig		30:CGA590	Other connectors available	
				T:30"Hg Vac-100psig		52:G5/8"-RH(F)		
				U:30"Hg Vac-200psig		63:W21.8-14RH(F)		
						64:W21.8-14LH(F)		
						Other connectors available		

NOTE: Dimensions subject to change, to be used for reference only.For detailed parameters, please consult HAL technical support.

HL9SL Series Stainless Steel Pressure Regulator

Features

- Single-stage pressure reducing structure
- One pressure gauge
- The body and diaphragm are hard sealed
- Female thread: 1/4"NPT (F)
- The internal structure is easy to purge,built in filter screen
- Panel type or wall type installation can be adopted
- Needle valve and diaphragm valve can be selected for air outlet

Specifications

- Inlet pressure max.: 3000psig
- Outlet pressure: 0～25psig,0～50psig,0～100psig,0～250psig,0～500psig
- Operating temperature:-40 ° F~+165 ° (-40 ° C~+74 ° C)
- Proof pressure: 150% of Maximum rated pressure
- Leak rate: $2x10^{-8}$ atm cc/sec He
- Cv:0.08

Flow Data

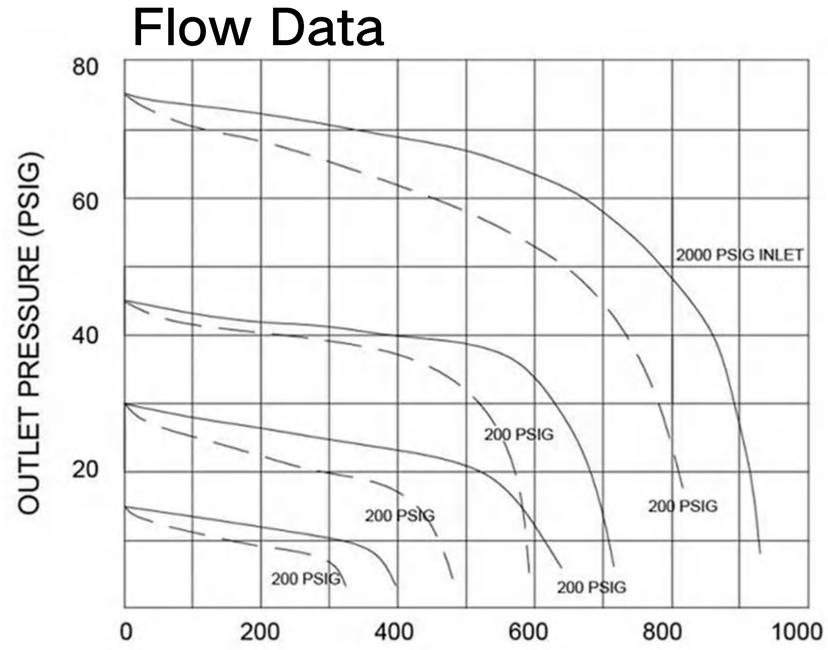

Materials Of Construction

- Body: SS316L
- Bonnet: 304 SS
- Diaphragm: Alloy C-276
- Valve seat：PCTFE
- Valve rod：SS316L

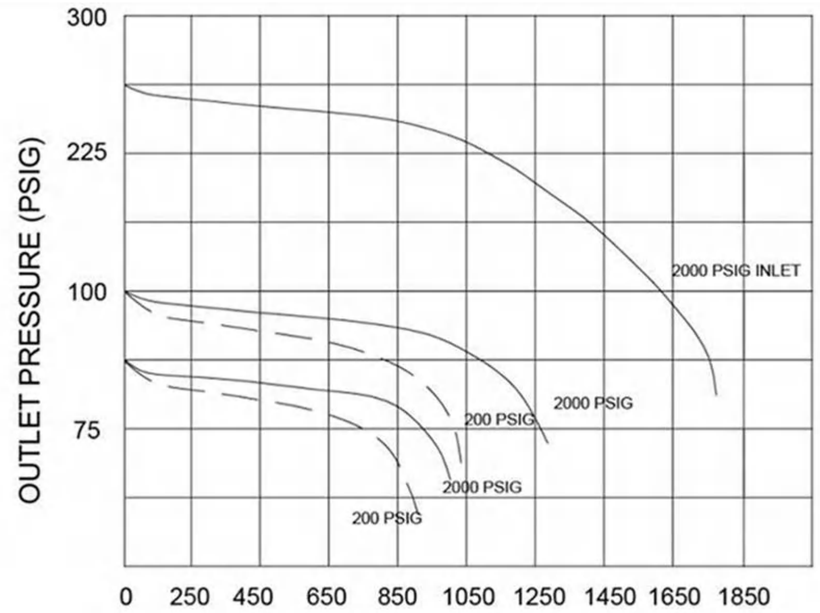

Dimensions

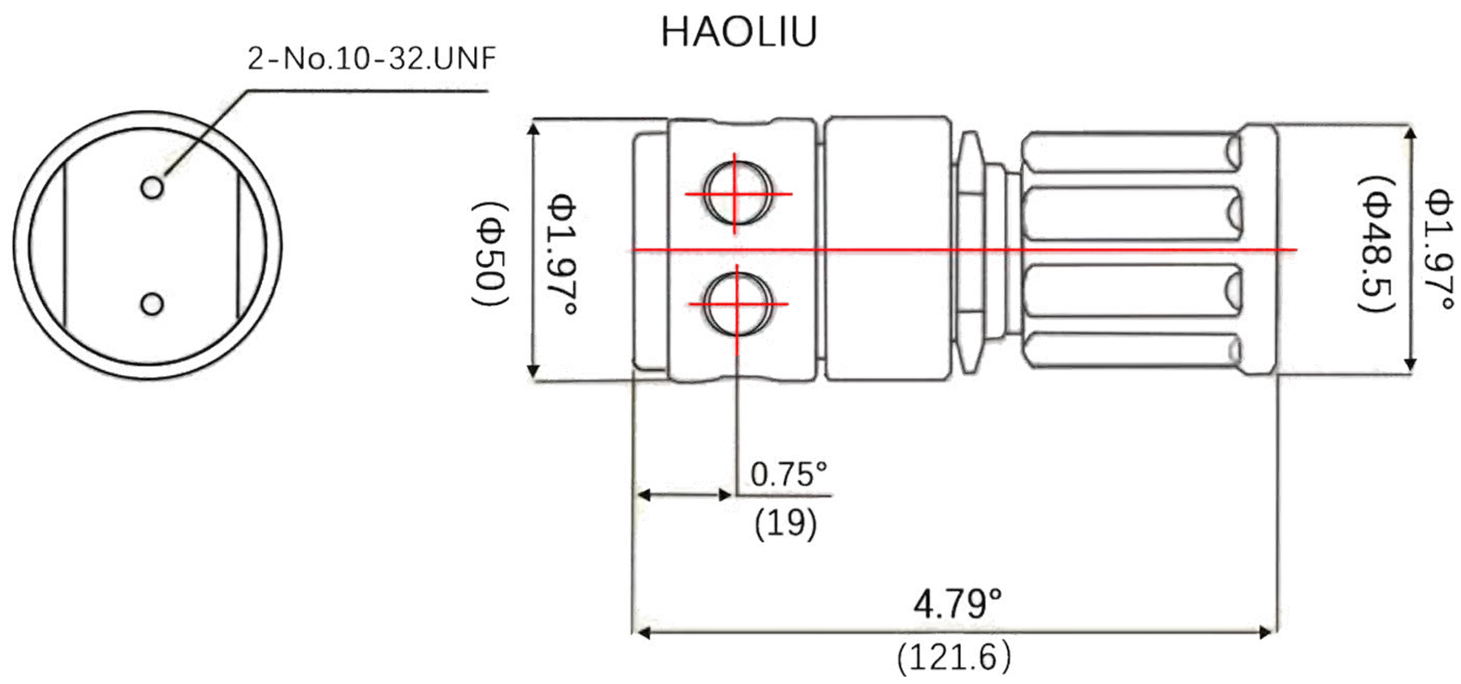

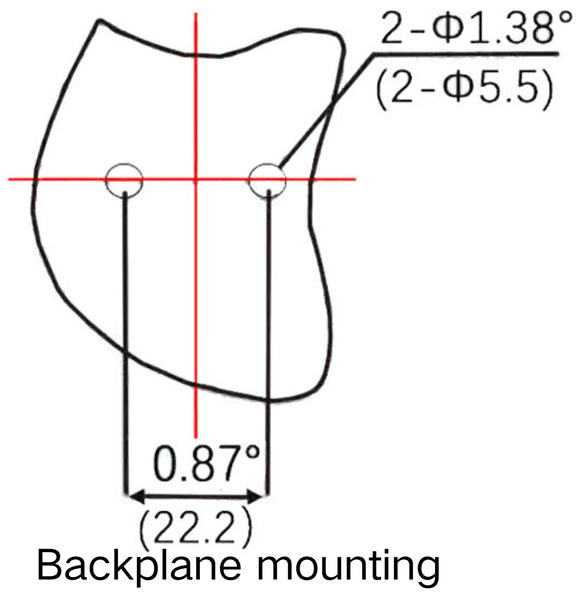

Backplane mounting dimension diagram

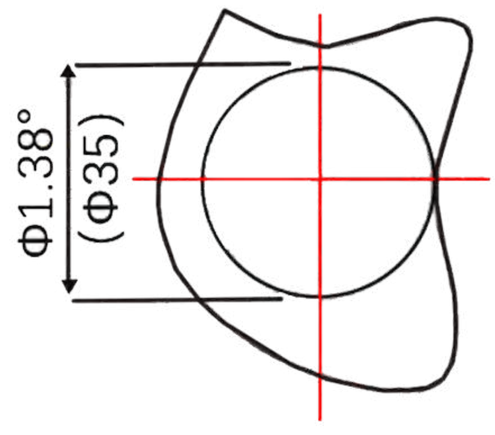

Panel mounting dimension diagram
(Maximum thickness 7mm)

Ordering Information

Serie	——	Outlet Gauge
Example: HL9SL	——	Example: 0-1.6Mpa

So the order number is:HL8SL-25M-1.6M

Series	Body Materials	Body ports	Inlet pressure	Outlet pressure	Gauge	Inlet connection	Outlet connection	Option
HL9SL	SS316L	A	D: 3000psig	H:0-150psig	G:With gauge	00:1/4"NPT(F)	00:1/4"NPT(F)	P:Panel mounting
		B	X:2200psig	I:0-100psig	(MPA)	01:1/4"NPT(M)	01:1/4"NPT(M)	R:Relief valve
		C	F:500psig	K:0-50psig	P:With pressure gauge	23:CGA330	10:1/8" Tube fittings	N:Needle valve
		D		L:0-25psig	(psi/bar)	24:CGA350	11:1/4" Tube fittings	D:Diaphragm valve
		G		M:0-15psig	W:Without gauge	27:CGA580	12:3/8" Tube fittings	
		H		Q:30"Hg Vac-30psig		28:CGA660	15:6mm Tube fittings	
		J		S:30"Hg Vac-60psig		30:CGA590	Other connectors available	
		M		T:30"Hg Vac-100psig		52:G5/8"-RH(F)		
				U:30"Hg Vac-200psig		63:W21.8-14RH(F)		
						64:W21.8-14LH(F)		
						Other connectors available		

NOTE: Dimensions subject to change, to be used for reference only.For detailed parameters, please consult HAL technical support.

HL10SL Series Stainless Steel Regulator

Features

- Two-stage pressure reducing structure
- Two pressure gauges
- The body and diaphragm are hard sealed
- Female thread: 1/4"NPT (F)
- The internal structure is easy to purge,built in filter screen
- Panel type or wall type installation can be adopted
- Needle valve and diaphragm valve can be selected for air outlet

Specifications

- Inlet pressure max.: 3000psig
- Outlet pressure: 0～25psig,0～50psig,0～100psig,0～250psig,0～500psig
- Operating temperature:-40 ° F~+165 ° (-40 ° C~+74 ° C)
- Proof pressure: 150% of Maximum rated pressure
- Leak rate: $2x10^{-8}$ atm cc/sec He
- Cv:0.08

Flow Data

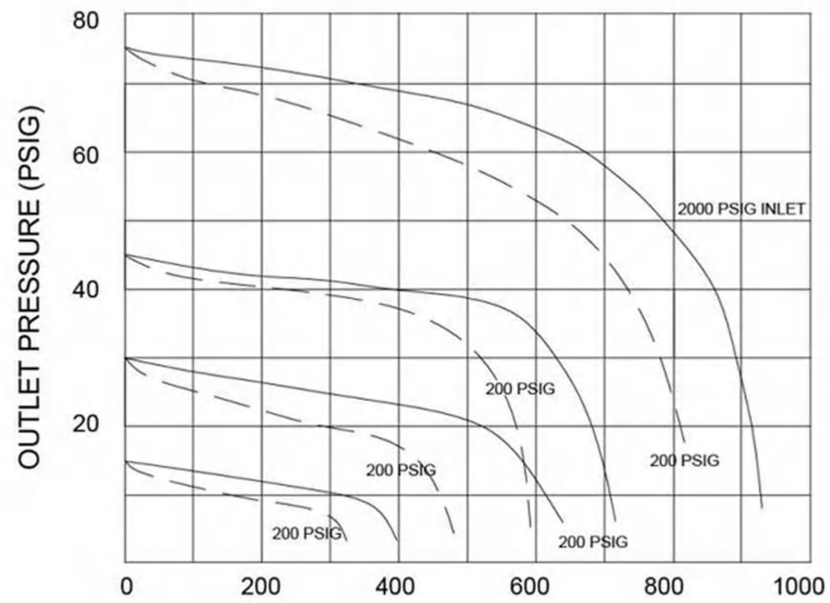

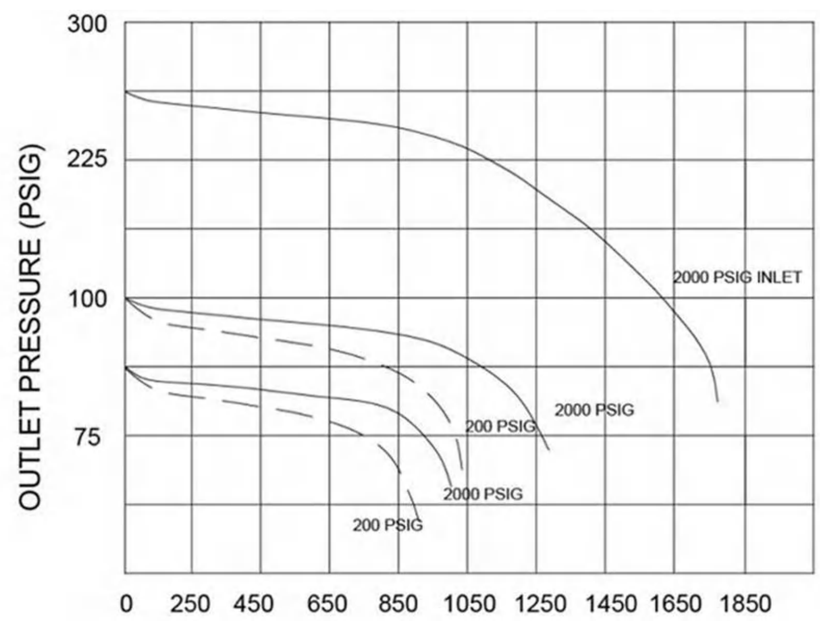

Materials Of Construction

- Body: SS316L
- Bonnet: 304 SS
- Diaphragm: Alloy C-276
- Valve seat： PCTFE
- Valve rod： SS316L

Dimensions

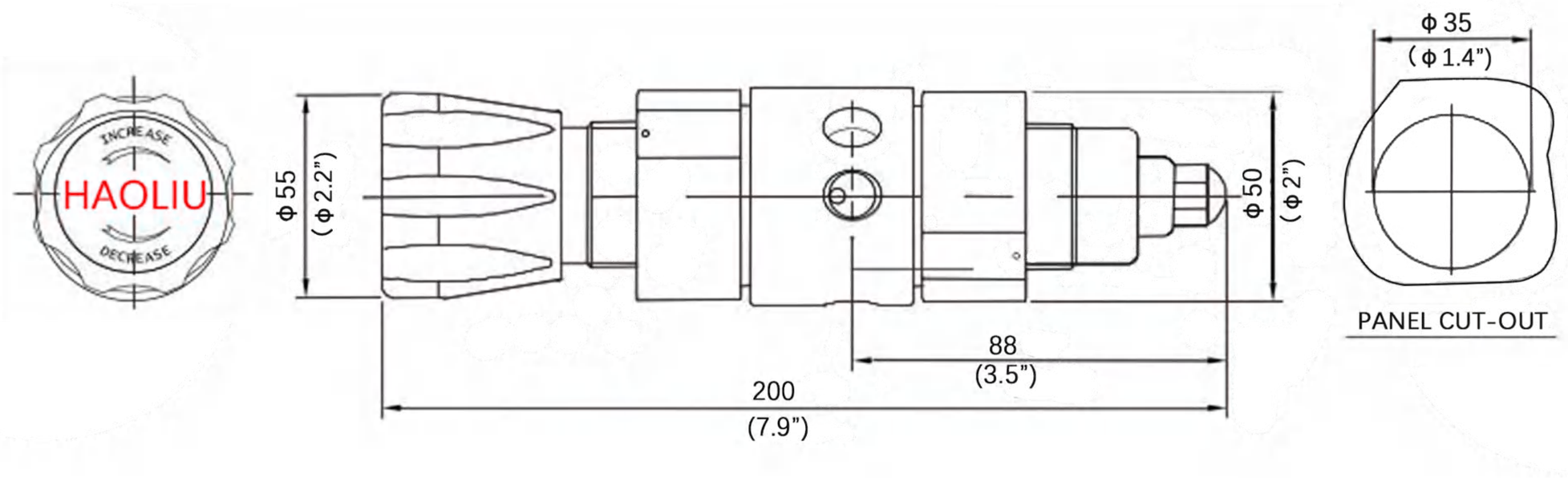

Ordering Information

Serie	—	Inlet Gauge	—	Outlet Gauge
Example：HL10SL	—	Example：0-25Mpa	—	Example：0-1.6Mpa
So the order number is:HL10SL-25M-1.6M				

Series	Body Materials	Body ports	Inlet pressure	Outlet pressure	Gauge	Inlet connection	Outlet connection	Option
HL10SL	SS316L	A	D：3000psig	H:0-250psig	G:With gauge	00:1/4"NPT(F)	00:1/4"NPT(F)	P:Panel mounting
		B	X:2200psig	I:0-100psig	(MPA)	00:1/4"NPT(M)	00:1/4"NPT(M)	R:Relief valve
		D	F:1500psig	K:0-50psig	P:With pressure gauge	23:CGA330	10:1/8" Tube fittings	N:Needle valve
				L:0-25psig	(psi/bar)	24:CGA350	11:1/4" Tube fittings	D:Diaphragm valve
				M:0-15psig	W:Without gauge	27:CGA580	12:3/8" Tube fittings	
				Q:30"Hg Vac-30psig		28:CGA660	15:6mm	
				S:30"Hg Vac-60psig		30:CGA590	Other connectors available	
				T:30"Hg Vac-100psig		52:G5/8"-RH(F)		
				U:30"Hg Vac-200psig		63:W21.8-14RH(F)		
						64:W21.8-14LH(F)		
						Other connectors available		

NOTE: Dimensions subject to change, to be used for reference only.For detailed parameters, please consult HAL technical support.

HL11SL Series Stainless Steel Regulator

It is applicable to the occasion of high flow output demand

Features

- Single-stage pressure reducing structure
- The body and diaphragm are hard sealed
- Female thread: 1/2"NPT (F),3/4"NPT (F)
- The internal structure is easy to purge,built in filter screen
- Panel type or wall type installation can be adopted
- Needle valve and diaphragm valve can be selected for air outlet

Specifications

- Inlet pressure max.: 3000psig
- Outlet pressure: 0～25psig,0～50psig,0～100psig,0～250psig,0～500psig
- Operating temperature:-40 ° F~+165 ° (-40 ° C~+74 ° C)
- Proof pressure: 150% of Maximum rated pressure
- Leak rate: $2x10^{-8}$ atm cc/sec He
- Cv:1.0

Flow Data

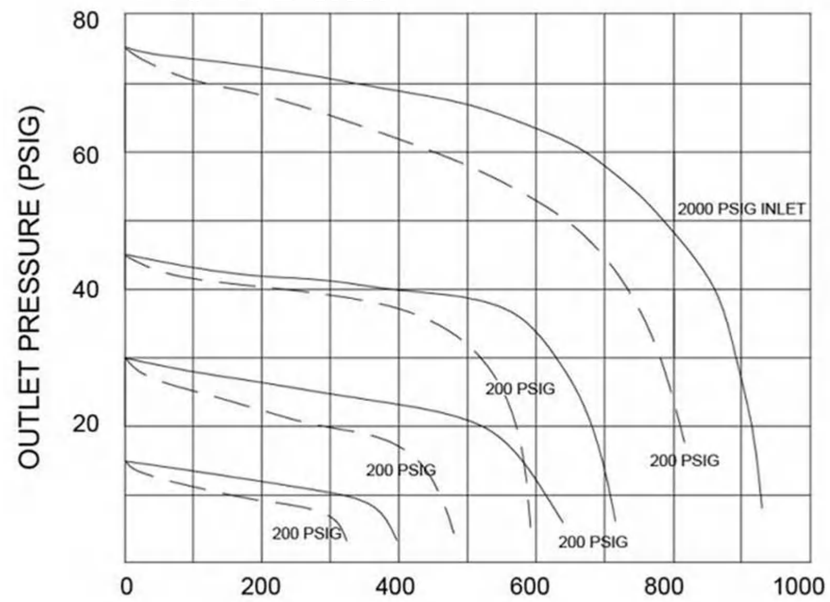

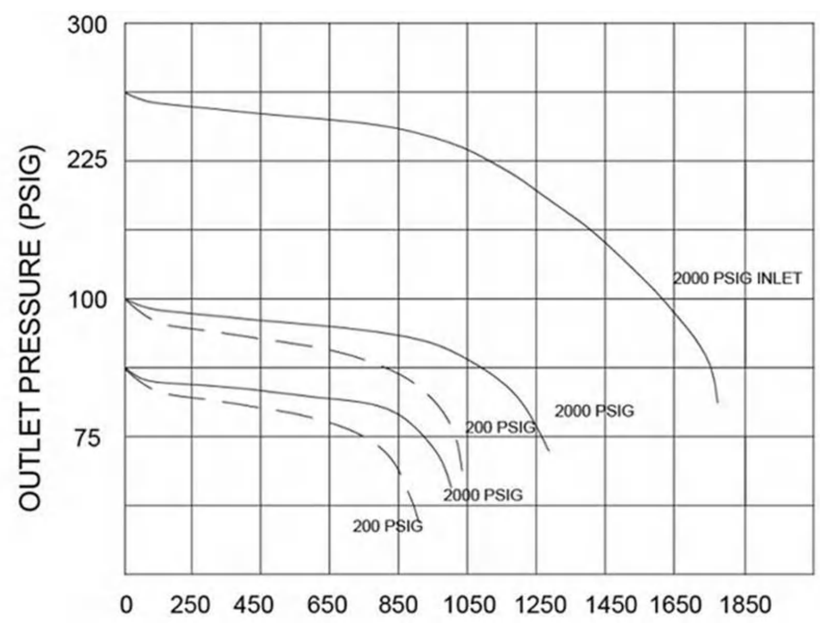

Materials Of Construction

- Body: SS316L
- Bonnet: 304 SS
- Diaphragm: Alloy C-276
- Valve seat： PCTFE
- Valve rod： SS316L

Dimensions

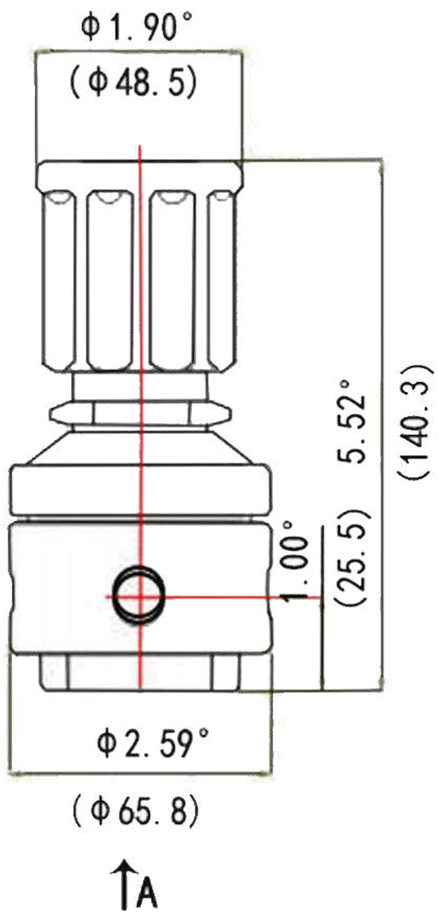

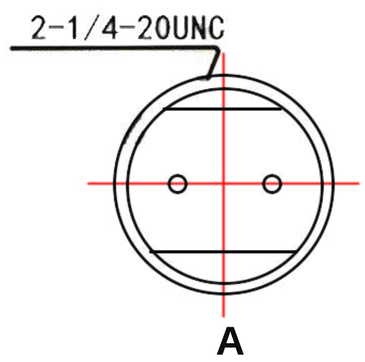

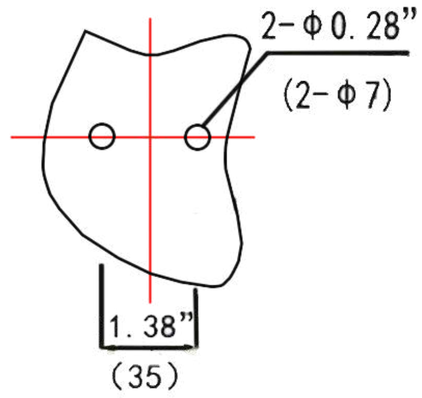

Backplane mounting dimension diagram

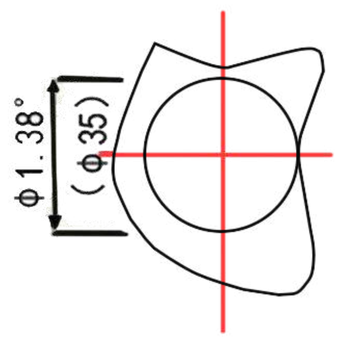

Panel mounting dimension diagram
(Maximum thickness 7mm)

Ordering Information

Serie	—	Outlet Gauge
Example: HL11SL	—	Example: 0-1.6Mpa

So the order number is:HL11SL-1.6M

Series	Body Materials	Body ports	Inlet pressure	Outlet pressure	Gauge	Inlet connection	Outlet connection	Option
HL11SL	SS316L	A	E: 1500psig	H:0-125psig	G:With gauge	05:1/2"NPT(M)	05:1/2"NPT(M)	P:Panel mounting
		B	F:500psig	I:0-250psig	(MPA)	06:3/4NPT(F)	06:3/4NPT(F)	R:Relief valve
		D		K:0-100psig	P:With pressure gauge	13: 1/2" Tube fittings	13:1/2" Tube fittings	N:Needle valve
		G		L:0-50psig	(psi/bar)	24:CGA350	11:3/4" Tube fittings	D:Diaphragm valve
		J		M:0-15psig	W:Without gauge	11:3/4" Tube fittings	44:3/8" Tube fittings	
		M		Q:30"Hg Vac-30psig		Other connectors available	Other connectors available	
				S:30"Hg Vac-60psig				
				T:30"Hg Vac-100psig				

NOTE: Dimensions subject to change, to be used for reference only.For detailed parameters, please consult HAL technical support.

HL211 Series Single-Sided Gas Control Panel

Features

- Using special gas single-stage pressure regulator
- Diaphragm valve knob with on/off indicator window
- Internal structure is easy to blow
- Expandability with convergence tubes
- Wall mountable
- Optional pressure alarm device available

Specifications

- Inlet pressure max.: 3000psig
- Outlet pressure: 0～25psig,0～50psig,0～100psig,0 ～ 250psig,0～500psig
- Operating temperature:-40 ° F~+165 ° (-40 ° C~+74 ° C)
- Proof pressure: 150% of Maximum rated pressure
- Leak rate: $2x10^{-8}$ atm cc/sec He
- Cv:0.08
- Weight:2.9KG

Flow Data

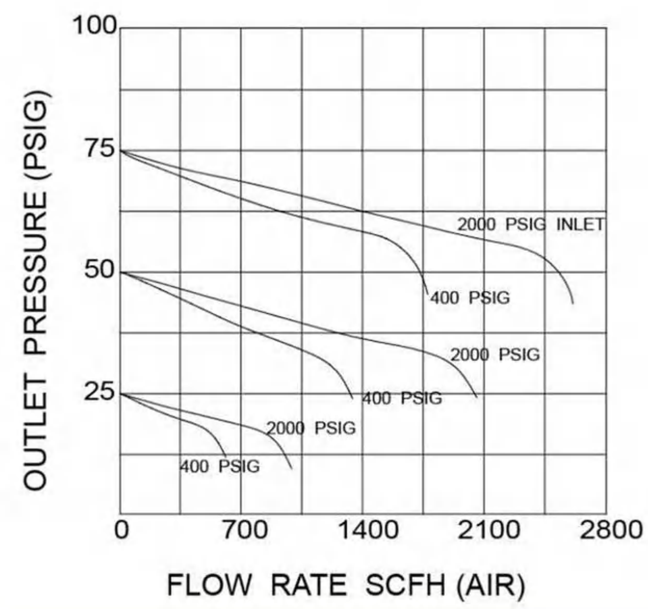

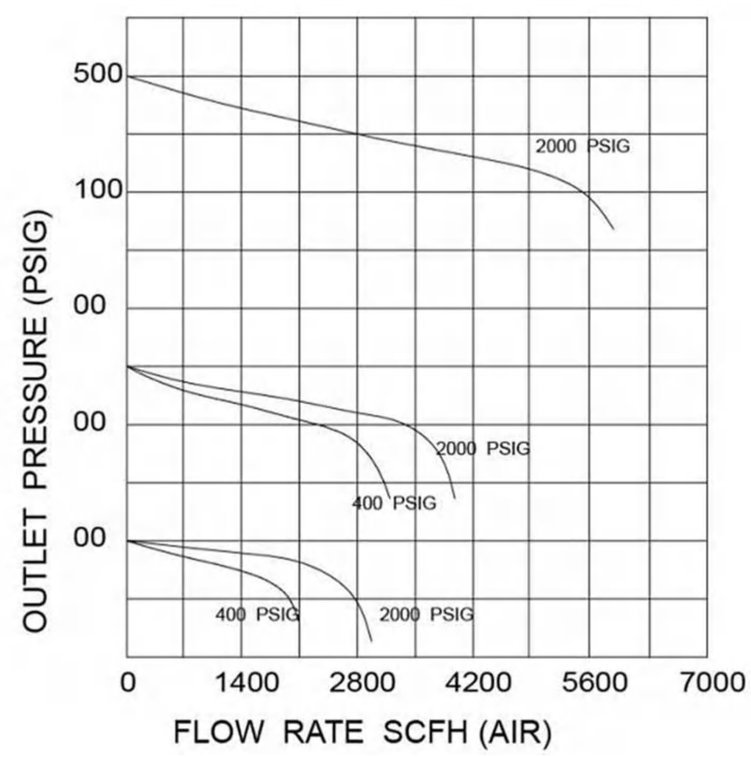

Materials Of Construction

- Body: SS316L
- Gasket: PTFE;PCTFE;PEEK
- Diaphragm valve: SS316L
- Inlet end: NPT 1/4(Female)

Dimensions

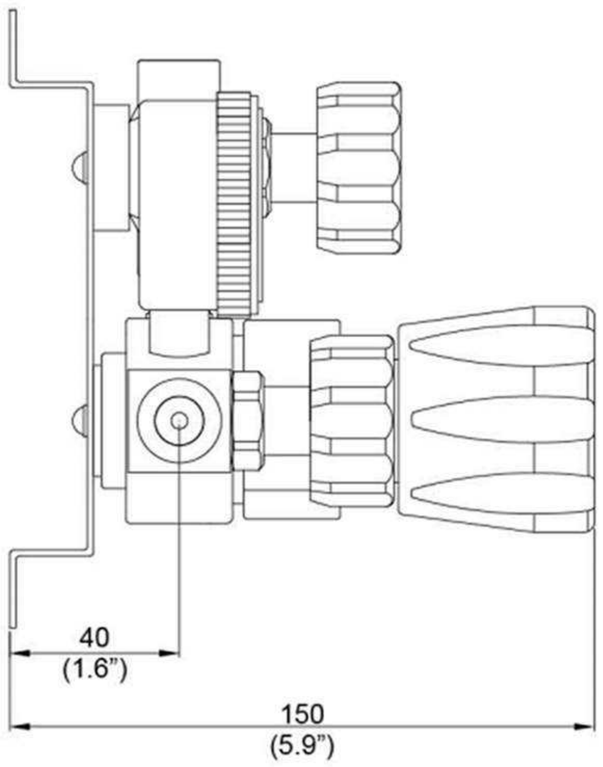

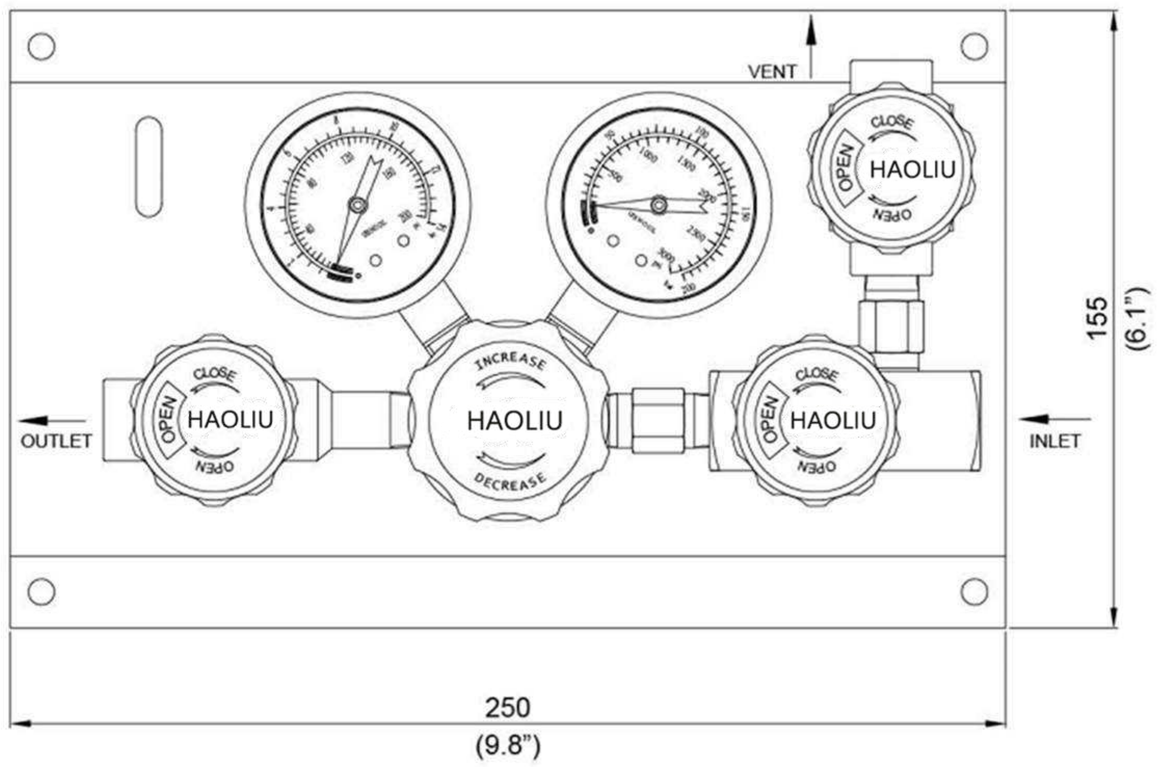

Ordering Information

Series	Body Materials	Body ports	Inlet pressure	Outlet pressure	Gauge	Inlet connection	Outlet connection	Option
HL221	SS316L	A	D：3000psig	F:0-500psig	G:With gauge	00:1/4"NPT(F)	00:1/4"NPT(F)	AP:High Pressure Hose
		B	X:2200psig	G:0-250psig	(MPA)	00:1/4"NPT(M)	00:1/4"NPT(M)	AR:Metal Tubing
		D	F:1500psig	L:0-100psig	P:With pressure gauge	23:CGA330	10:1/8" Tube fittings	FA:Flashback Arrestor
				K:0-50psig	(psi/bar)	24:CGA350	11:1/4" Tube fittings	F:Relief Valve
				Q:30"Hg Vac-30psig	W:Without gauge	27:CGA580	12:3/8" Tube fittings	
				S:30"Hg Vac-60psig		28:CGA660	15:6mm	
				T:30"Hg Vac-100psig		30:CGA590	Other connectors available	
				U:30"Hg Vac-200psig		52:G5/8"-RH(F)		
						63:W21.8-14RH(F)		
						64:W21.8-14LH(F)		
						Other connectors available		

NOTE: Dimensions subject to change, to be used for reference only.For detailed parameters, please consult HAL technical support.

HL222 Series Semi-Automatic Switchover Gas Control Panel

Features

- Using special gas single-stage pressure regulator
- Diaphragm valve knob with on/off indicator window
- Internal structure is easy to blow
- Expandability with convergence tubes
- Wall mountable
- Optional pressure alarm device available

Flow Data

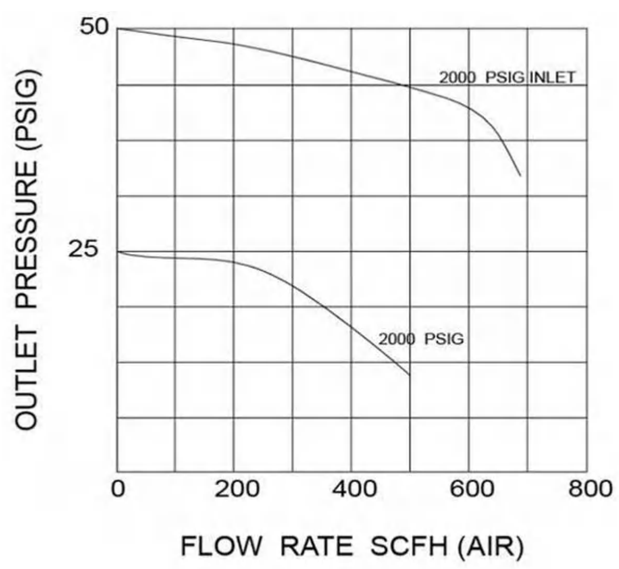

Specifications

- Inlet pressure max.: 3000psig
- Outlet pressure: 0～25psig,0～50psig,0～100psig,0 ～ 250psig
- Operating temperature:-40 ° F~+165 °
  (-40 ° C~+74 ° C)
- Proof pressure: 150% of Maximum rated pressure
- Leak rate: $2x10^{-8}$ atm cc/sec He
- Cv:0.08
- Weight:6KG

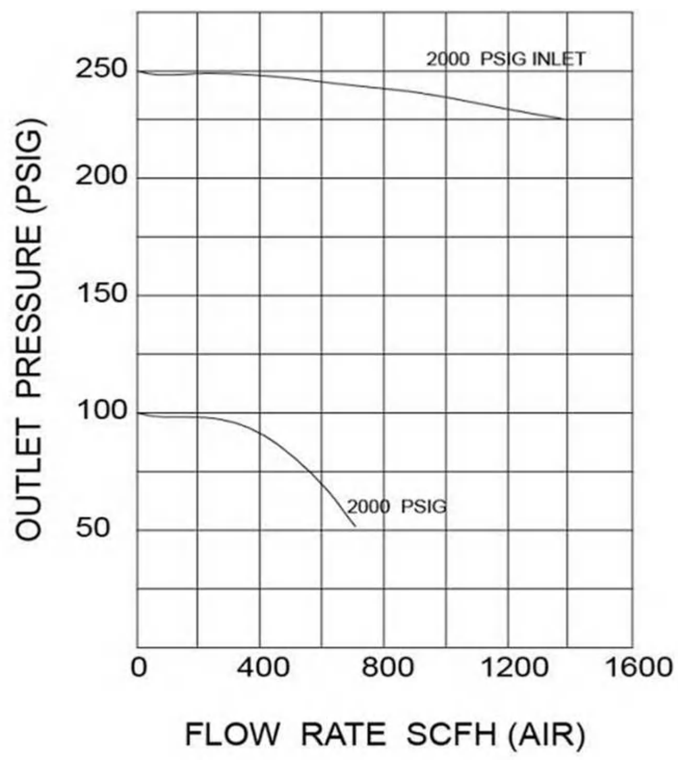

Materials Of Construction

- Body: SS316L
- Gasket: PTFE;PCTFE;PEEK
- Diaphragm valve: SS316L
- Inlet end: NPT 1/4(Female)

Dimensions

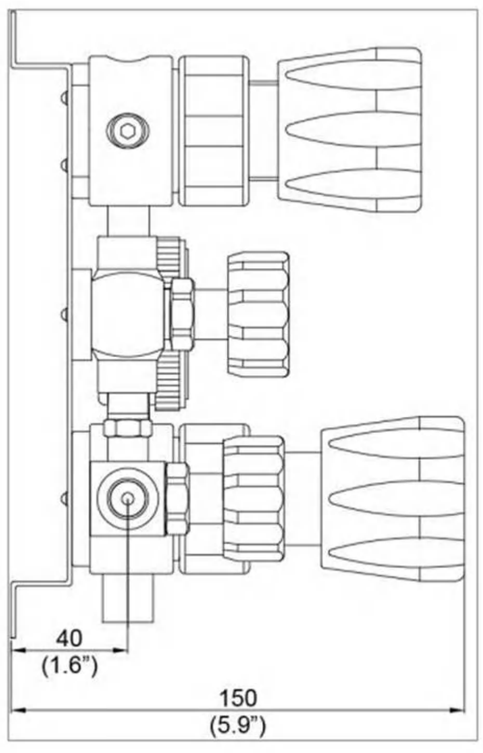

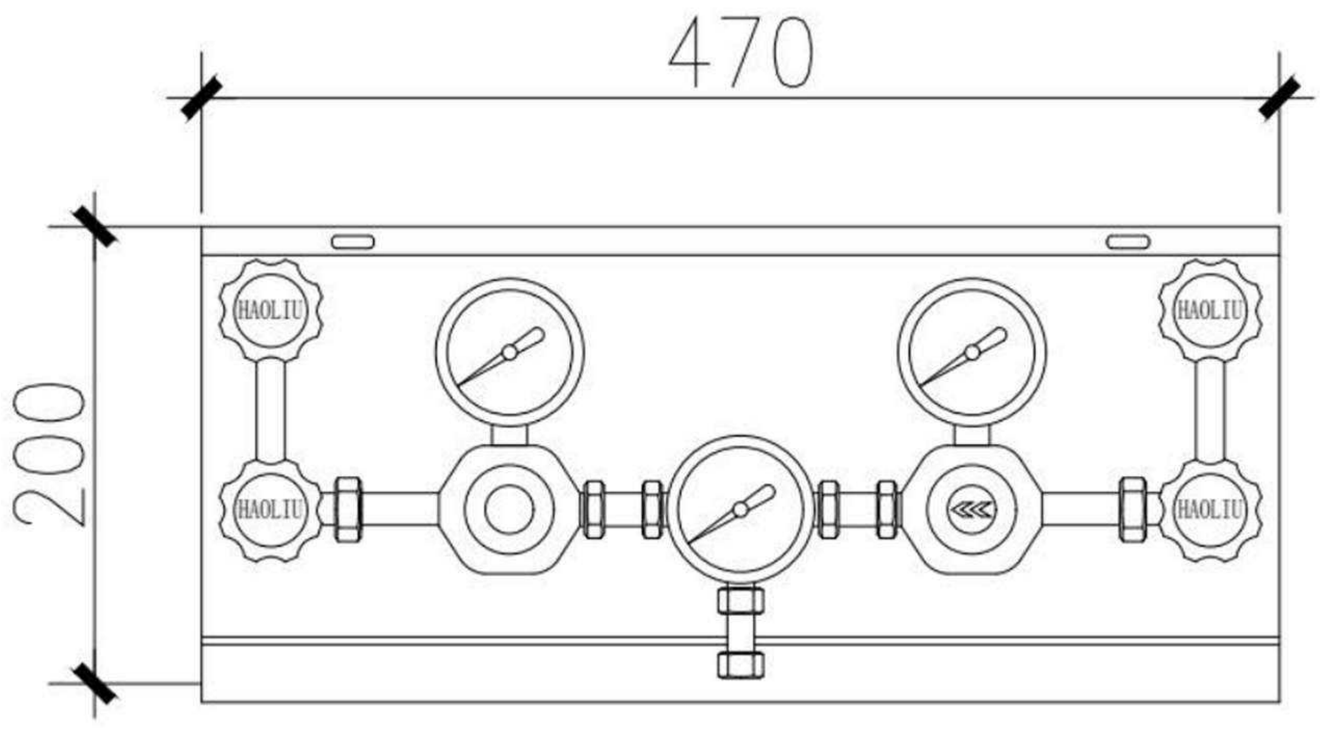

Ordering Information

Series	Body Materials	Inlet pressure	Outlet pressure	Gauge	Inlet connection	Outlet connection	Option
HL222	SS316L	D：3000psig	G:0-250psig	G:With gauge	00:1/4"NPT(F)	00:1/4"NPT(F)	A:Remote Alarm
		X:2200psig	I:0-100psig	(MPA)	01:1/4"NPT(M)	00:1/4"NPT(M)	AP:High Pressure Hose
		F:500psig	K:0-50psig	P:With pressure gauge	23:CGA330	10:1/8" Tube fittings	AR:Metal Tubing
			L:0-50psig	(psi/bar)	24:CGA350	11:1/4" Tube fittings	FA:Flashback Arrestor
			M:0-15psig		27:CGA580	12:3/8" Tube fittings	D:Outlet Diaphragm Valve
					28:CGA660	15:6mm	
					30:CGA590	16:8mm	
					52:G5/8"-RH(F)	Other connectors available	
					63:W21.8-14RH(F)		
					64:W21.8-14LH(F)		
					Other connectors available		

NOTE: Dimensions subject to change, to be used for reference only.For detailed parameters, please consult HAL technical support.

HL223 Series Double-Sided Gas Control Panel

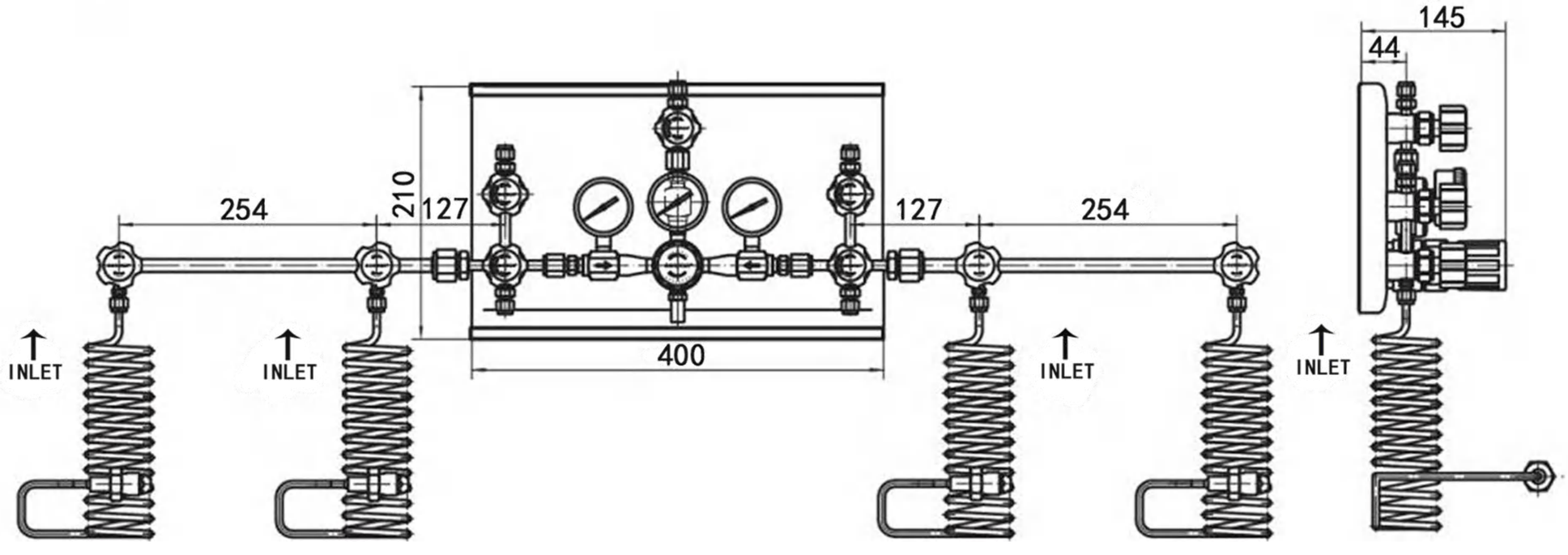

Ordering Information

Series	Body Materials	Inlet pressure	Outlet pressure	Gauge	Inlet connection	Outlet connection	Option
HL223	SS316L	D：3000psig	G:0-250psig	G:With gauge	00:1/4"NPT(F)	00:1/4"NPT(F)	A:Remote Alarm
		X:2200psig	I:0-100psig	(MPA)	01:1/4"NPT(M)	00:1/4"NPT(M)	AP:High Pressure Hose
		F:500psig	K:0-50psig	P:With pressure gauge	23:CGA330	10:1/8" Tube fittings	AR:Metal Tubing
			L:0-50psig	(psi/bar)	24:CGA350	11:1/4" Tube fittings	FA:Flashback Arrestor
			M:0-15psig		27:CGA580	12:3/8" Tube fittings	R:Relief Valve
					28:CGA660	15:6mm	
					30:CGA590	16:8mm	
					52:G5/8"-RH(F)	Other connectors available	
					63:W21.8-14RH(F)		
					64:W21.8-14LH(F)		
					Other connectors available		

NOTE: Dimensions subject to change, to be used for reference only.For detailed parameters, please consult HAL technical support.

HL224 Series Terminal Gas Control Panel

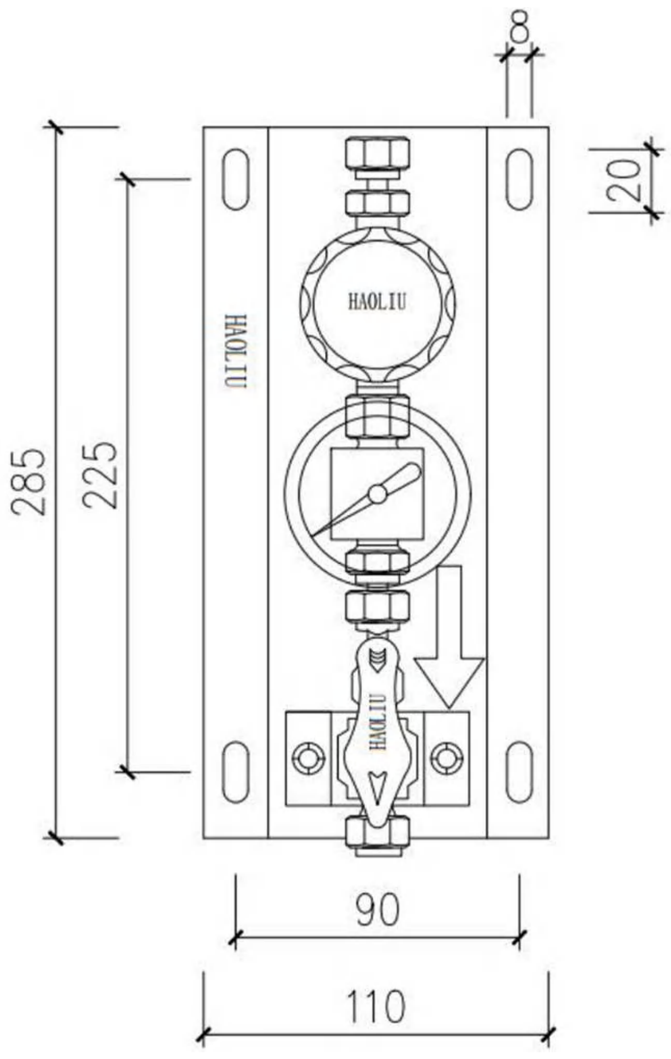

Ordering Information

Series	Body Materials	Body ports	Inlet pressure	Outlet pressure	Gauge	Inlet connection	Outlet connection	Option
HL224	SS316L	A	D：3000psig	G:0-250psig	G:With gauge	00:1/4"NPT(F)	00:1/4"NPT(F)	A:Remote Alarm
		B	X:2200psig	I:0-100psig	(MPA)	01:1/4"NPT(M)	00:1/4"NPT(M)	AP:High Pressure Hose
		D	F:1500psig	K:0-50psig	P:With pressure gauge	23:CGA330	10:1/8" Tube fittings	AR:Metal Tubing
				L:0-25psig	(psi/bar)	24:CGA350	11:1/4" Tube fittings	F:Relief Valve
				M:0-15psig	W:Without gauge	27:CGA580	12:3/8" Tube fittings	
						28:CGA660	15:6mm	
						30:CGA590	16:8mm	
						52:G5/8"-RH(F)	Other connectors available	
						63:W21.8-14RH(F)		
						64:W21.8-14LH(F)		
						Other connectors available		

NOTE: Dimensions subject to change, to be used for reference only.For detailed parameters, please consult HAL technical support.

HG25SL Series Two-Cylinder Manual Gas Control Panel

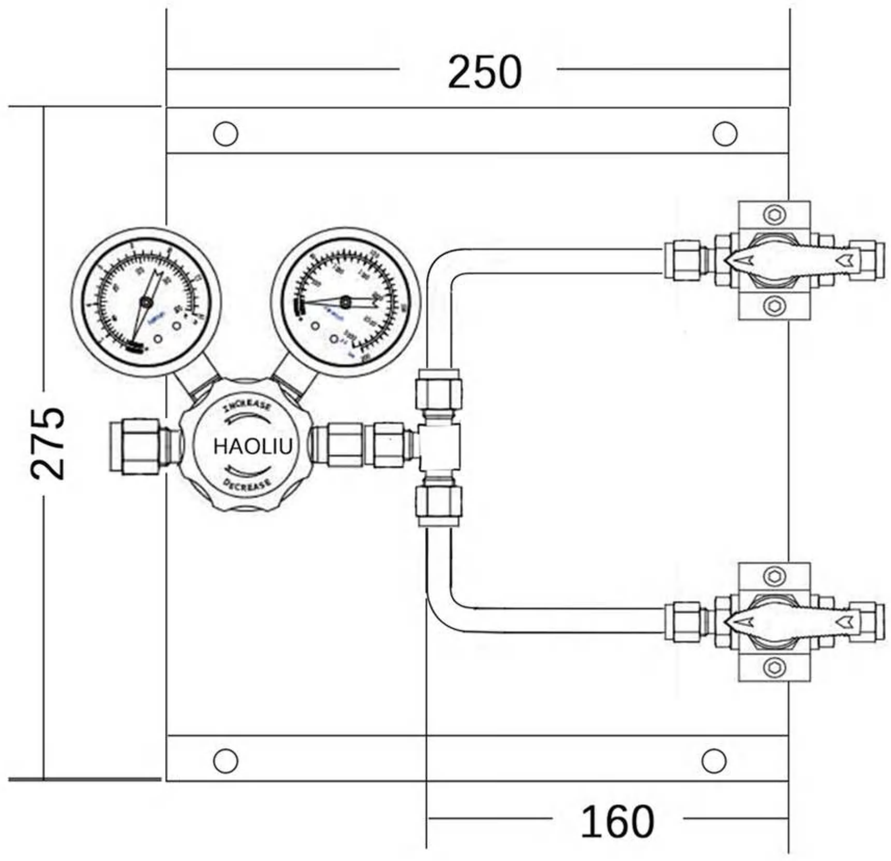

Ordering Information

Series	Body Materials	Body ports	Inlet pressure	Outlet pressure	Gauge	Inlet connection	Outlet connection	Option
HG25SL	SS316L	A	D：3000psig	G:0-250psig	G:With gauge	00:1/4"NPT(F)	00:1/4"NPT(F)	A:Remote Alarm
		B	X:2200psig	I:0-100psig	(MPA)	01:1/4"NPT(M)	01:1/4"NPT(M)	AP:High Pressure Hose
		D	F:1500psig	K:0-50psig	P:With pressure gauge	23:CGA330	10:1/8" Tube fittings	AR:Metal Tubing
				L:0-25psig	(psi/bar)	24:CGA350	11:1/4" Tube fittings	F:Relief Valve
				M:0-15psig	W:Without gauge	27:CGA580	12:3/8" Tube fittings	
						28:CGA660	15:6mm Tube fittings	
						30:CGA590	16:8mm Tube fittings	
						52:G5/8"-RH(F)	Other connectors available	
						63:W21.8-14RH(F)		
						64:W21.8-14LH(F)		
						Other connectors available		

NOTE: Dimensions subject to change, to be used for reference only.For detailed parameters, please consult HAL technical support.

HLG25SL Series Single-Cylinder Manual Gas Control Panel

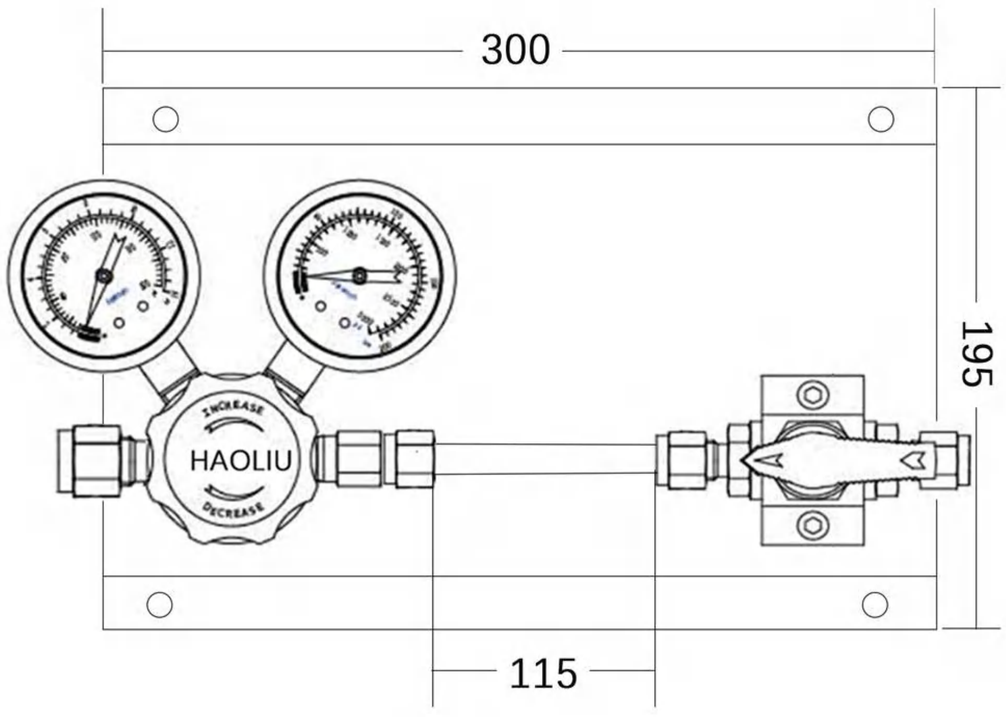

Ordering Information

Series	Body Materials	Body ports	Inlet pressure	Outlet pressure	Gauge	Inlet connection	Outlet connection	Option
HLG25SL	SS316L	A	D：3000psig	G:0-250psig	G:With gauge	00:1/4"NPT(F)	00:1/4"NPT(F)	A:Remote Alarm
		B	X:2200psig	I:0-100psig	(MPA)	01:1/4"NPT(M)	01:1/4"NPT(M)	AP:High Pressure Hose
		D	F:1500psig	K:0-50psig	P:With pressure gauge	23:CGA330	10:1/8" Tube fittings	AR:Metal Tubing
				L:0-25psig	(psi/bar)	24:CGA350	11:1/4" Tube fittings	F:Relief Valve
				M:0-15psig	W:Without gauge	27:CGA580	12:3/8" Tube fittings	
						28:CGA660	15:6mm Tube fittings	
						30:CGA590	16:8mm Tube fittings	
						52:G5/8"-RH(F)	Other connectors available	
						63:W21.8-14RH(F)		
						64:W21.8-14LH(F)		
						Other connectors available		

NOTE: Dimensions subject to change, to be used for reference only.For detailed parameters, please consult HAL technical support.

HLS Series Extensions

Left side type

HLSL-210-FNT4-TF8

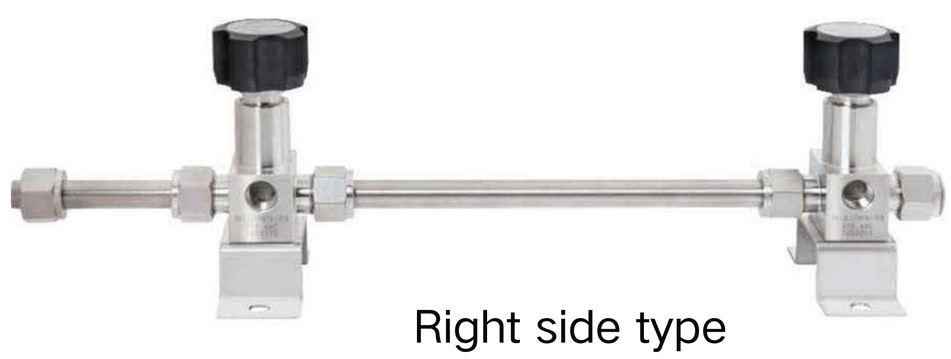

Right side type

HLSR-210-FNT4-TF8

Dimensionsns

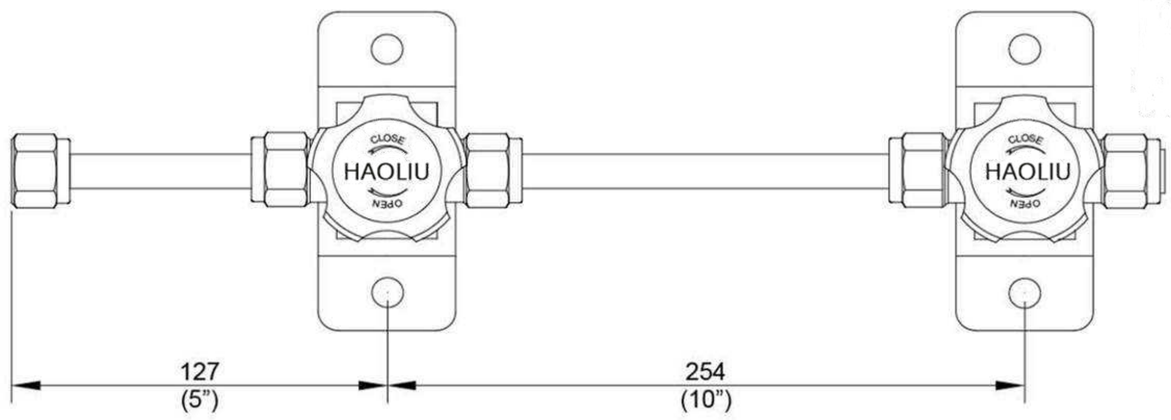

Features

- ▶For gas control panel,easy installation and flexible expansion
- ▶According to the use of position is divided into left, right type
- ▶Pressure and leakage tested
- ▶Maximum intake pressure 3000Psig
- ▶Wall mounting

Materials Of Construction

- ▶Body: 316 SS
- ▶Valve seat: PCTFE
- ▶Diaphragm valve: SS316L
- ▶Pipe OD: 1/2 "
- ▶BA tube:SS316L

Series	Structure	Stations	Station distance	Outlet connection	Inlet connection	Length connection
HLS	R:Right	2；3；5	5：127mm	TF8: 1/2" Tube Fitting	FNT4:1/4"NPT(F) (standard)	None: 127mm (standard)
	L:Left		10:254mm（ standard）		NT4:1/4"NPT(M)	12: 254mm

NOTE: Dimensions subject to change, to be used for reference only.For detailed parameters, please consult HAL technical support.

Accessories

Diaphragm Valves

- Suitable for high purity and corrosive gases
- Internal diaphragm sealing structure
- Low impact on the purity of the gas medium
- Maximum working pressure: 3500psi

MHL-FNT

MPHL-NT

Series	Inlet Connection	Outlet Connection	Cv
MHL-FNT4	1/4NPT(F)	1/4NPT(F)	0.15
MHL-FNT10	1/2NPT(F)	1/2NPT(F)	0.15
MPHL-NT4	1/4	1/4	0.15
MPHL-NT4M	6mm	6mm	0.15
MPHL-NT10	1/2	1/2	0.15

Flexible Hose

- For the connection of gas cylinder and use end
- Type: Coil, hose

Series	Length	Inlet Connection	Outlet Connection	Option
HPF	500:0.5m	00:1/4NPT(F)	00:1/4NPT(F)	CV: check valves
	1000:1m	52:G5/8-RH(F)	01:1/4NPT(M)	

Pressure Gauges

- Connection size:1/4 NPT(Male)
- Accuracy class:2.5 ， ±3-2-3%
- Bourden tube :SS316L

bottom mount

center back mount

Range (MPA)				
0-0.16	0-0.25	0-0.4	0-0.6	0-1
0-1.6	0-2.5	0-4	0-6	0-10
0-16	0-25	0-40	0-60	

Cylinder Connections

- Air inlet pipe and air inlet nut are suitable for connection of pressure regulator inlet, valve outlet and tube welding

	Threaded Connection(1/4NPT)	Welded Connection(1/4 tube)
Size	Model Number	Model Number
G5/8-RH	HAG-5	HAW-5
W21.8-LH	HAG-5H	HAW-5H
W21.8-RH	HAG-5Q	HAW-5Q

Guide Rail&Tube Clamps

- Guide rails and tube clamps support the wall mounting of seamless steel tubing

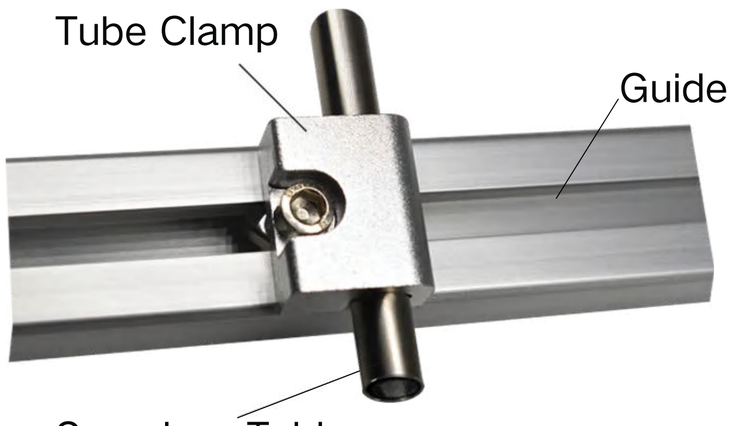

Aluminum tube clamps	
型号	规格
Series	Size
GJ-4	1/4
GJ-6	3/8
GJ-8	1/2

Plastic tube clamps	
型号	规格
Series	Size
GJ-3M	3mm
GJ-6M	6mm
GJ-8M	8mm
GJ-10M	10mm
GJ-15M	15mm
GJ-20M	20mm

Guide Rail	
Material	Model Number
Aluminum Guide Rail	LDG*1M
Iron Guide Rail	TDG*1M

上海浩流机械设备有限公司

Shanghai Haoliu Mechanical Equipment Co., LTD

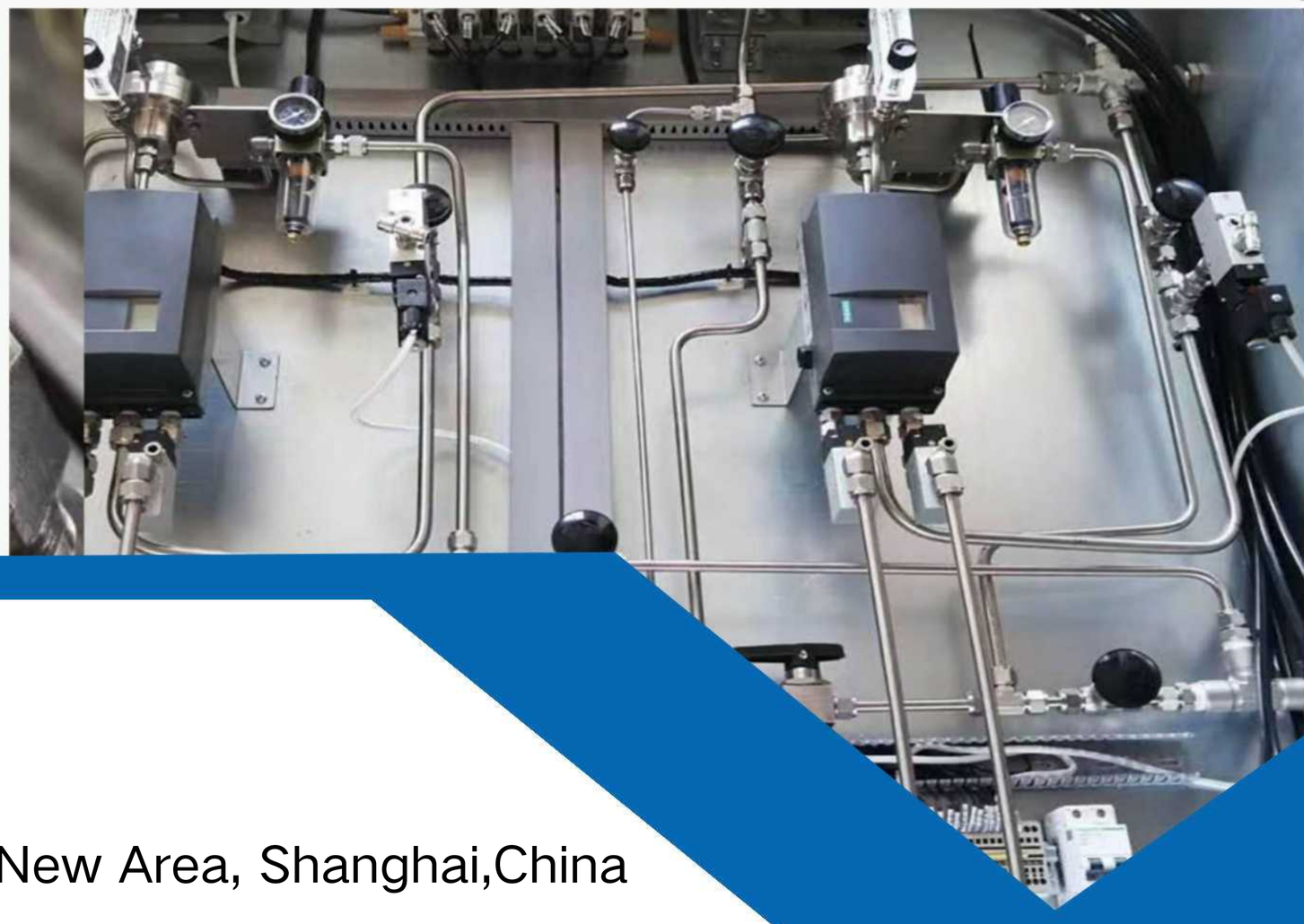

Address: No.29 Jin Tang Road, Pudong New Area, Shanghai,China
Phone Number：021-50409310
Mobile Number：18721872815 ,15921409894
Website：www.haoliuzx.com
E-mail：xueyong@haoliuzx.com